NOTES: (UNLESS OTHERWISE SPECIFIED)

1. ALL RESISTORS ARE 1/4W, ±5%

2. PIN 7 IS GRD & PIN 14 IS +5V FOR ALL 14 PIN INTEGRATED CIRCUIT PACKAGES.
   PIN 12 IS GRD & PIN 24 IS +5V FOR ALL 24 PIN INTEGRATED CIRCUIT PACKAGES.
   PIN 8 IS GRD & PIN 16 IS +5V FOR ALL 16 PIN INTEGRATED CIRCUIT PACKAGES EXCEPT AT LOCATIONS LISTED BELOW.
   AT U4, W4, Y4 & Z4 PIN 5 IS +5V & PIN 12 IS GRD

3. THIS DRAWING CONSISTS OF THE FOLLOWING SHEETS:
   1.0, 2.0, 2.1, 3.0, 4.0, 5.0 8.0, 9.0, 10.0 11.0, 12.0, 13.0, 14.0, 15.0 16.0, 16.1, 17.0, 18.0
   18.1, 18.2, 19.0, 20.0, 21.0, 22.0, 23.0, 24.0, 25.0, 26.0, 27.0, 28.0, 29.0, 30.0, 31.0, 32.0, 33.0
   34.0, 35.0, 36.0, 37.0, 38.0, 39.0, 40.0, 41.0, 42.0, 43.0, 43.1, 44.0, 45.0, 46.0
   47.0, 48.0, 48.1, 49.0, 50.0, 51.0, 52.0, 53.0, 54.0, 55.0, 56.0, 57.0, 58.0,
   59.0, 60.0, 61.0, 62.0, 63.0, 64.0, 65.0, 66.0, 67.0, 68.0, 69.0, 70.0, 71.0,
   72.0, 73.0, 74.0, 75.0, 76.0, 77.0, 78.0, 79.0, 80.0, 81.0, 82.0, 83.0, 84.0, 85.0,
   86.0, 87.0, 88.0, 89.0, 90.0, 91.0, 92.0, 93.0, 94.0, 95.0, 96.0, 97.0, 98.0,
   99.0, 100.0, 101.0, 102.0, ~~103.0~~, 104.0, 105.0, 106.0, 107.0, 108.0, 109.0, 110.0,
   111.0, 112.0, 113.0, 114.0, 115.0, 116.0, 117.0, 118.0, 119.0, 120.0

4. ALL CAPACITOR VALUES ARE .01 µf

REFERENCE DESIGNATIONS	
LAST USED	NOT USED
C53	C23, 47, 51
R44	R7, 35, 36, 37
Y1	
L1	
P1	
J6	J1

REFERENCE DRAWINGS	
44E0614	A[illegible]
44P0614	PA[illegible]
40E0524	P.W. E[illegible]
97E0749	AR[illegible]RK
97E0750	SOLDER [illegible]
97E0751	S[illegible]

DR	
CHK	
DSGN	[illegible]
ENGR	[illegible]
APPD	[illegible]
APPD	

THIS DOCUMENT MAY CONTAIN PROPRIETARY INFORMATION AND SUCH INFORMATION MAY NOT BE DISCLOSED TO OTHERS FOR ANY PURPOSE OR USED TO PRODUCE THE ARTICLE OR SUBJECT, WITHOUT WRITTEN PERMISSION FROM VDM

varian data machines /a varian subsidiary
2722 michelson drive / irvine / california / 92664

TITLE
LOGIC DIAGRAM,
PROCESSOR BD. DM-[illegible]

CODE IDENT NO.	SIZE	DWG NO	REV
21101	B	91B0378	AT

SCALE ——— SHEET 1.0

1/70 DIETZGEN-HOST CLEARPRINT 1000H

	REVISIONS				
CODE	SYM	ZONE	DESCRIPTION	APPROVED	DATE
	X		PILOT RELEASE EN 80761		
	X2		REVISED PER EN 80929		
	A		PRODUCTION RELEASE PER EN 80993		
	B		REVISED PER EN 81064		
	C	GRL	REVISED PER EN 81143		
	D		REVISED PER EN 81231		
	E		REVISED PER EN 81289		
	F		REVISED PER EN 81321		
	G		REVISED PER EN 81348		
	H		REVISED PER EN 81428		
	J		REVISED PER EN 81481		
	K		REVISED PER EN 81584		
	L	CW	REVISED PER EN 81638		
	M	CW	REVISED PER EN 81749		
	N	CW	REVISED PER EN 81750		
	P	CW	UPDATED FORMAT PER EN 81778		
	R		REVISED PER EN 81876		
	-	CW	REVISED PER EN 81933		
	-	CW	REVISED PER EN 81934		
	S		REVISED PER EN 82103		
	T		REVISED PER EN 82136		
	V		REVISED PER EN 82245		
	W		REVISED PER EN 82249		
	-		REVISED PER EN 82408		
1	Y	PSH	REVISED SHT 1,91,92,97 PER EN 82425		
1	Z	PSH	REVISED SHT 3.0, 95.0 PER EN 82556		
1	AA	PSH	REVISED SHTS 1.0, 3.0, 4.0, 5.0, 43.0 & 92.0 PER EN 82648		
1	AB	PSH	REVISED SHTS 3.0, 39.0, 45.0, 93.0, 97.0, 98.0, 99.0, 120.0 PER EN 82649		
1	AC	PSH	REVISED SHTS 73.0, 74.0, & 120.0 PER EN 82650		
3	-	PSH	REVISED SHTS 90.0, 97.0 PER EN 82668		
2	AD	PSH	REVISED SHTS 42.0 AND 89.0 PER EN 82700.		
1	AE		REVISED SHT 46.0 PER EN 82777		
2	AF		SH 5.0, LOCATION M9 WAS: 74151 PER EN 82855	W. Brown	3/17/94
1	AG		REVISED SHEETS 119.0 & 120.0 PER EN 82994.	W. Brown	9/11/94

CODE IDENT NO.	SIZE	DWG NO	REV
21101	B	9180378	AT
SCALE ——		SHEET 2.0 OF	

2 1

D C B A

REVISIONS

CODE	DYN	ZONE	DESCRIPTION	APPROVED	DATE
1	AH	[illegible]	REVISED SHTS 3.0, 12.0 & 97.0 PER EN 83302	W. Brown	8/6/74
3	AJ	W.G	REVISED SHT'S 3.0, 5.0, 7.0 – 13.0, 16.0, 17.0 – 18.2, 26.0, 33.0 – 41.0, 43.1, 44.0 46.0, 48.0, 48.1, 51.0, 52.0, 57.0 – 60.0 65.0, 73.0, 74.0, 76.0 – 79.0, 87.0, 88.0, 90.0, 92.0, 94.0 – 97.0, 99.0, 101.0, 102.0, 117.0 – 119.0 PER EN 83303	W. Brown	8/9/74
3	AK	W.G.	REVISED SHT. 92.0 PER EN 83304	J. Brown	8/10/74
1	AL	W.G	REVISED SHT. 2.0 PER EN 83305	J. Brown	8/9/74
1	AM	J.Z	REVISED SHT. 92.0 & 96.0 PER EN 83430	[illegible]	1 [illegible]
1	AN	J.Z.	REVISED SHT. 12.0 PER EN 83431	[illegible]	[illegible]
1	AP	GRL	SHEET 5.0 LOCATION K8 WAS 74H04 PER EN 83584	[illegible]	5-1-75
1	AR	GRL	REVISED SH 93.0, 95.0 AND 120 0 PER EN 83668	[illegible]	5-1-75
1	AS	GRL	REVISED SH 95.0 PER EN 83718	[illegible]	5-1-75
3	AT	GRL	ADDED NOTE 1 TO SH 4.0 LOCATIONS A1, C1, D1, E1, H1, J1, K1, M1, L4, M4, S4 AND T4 PER EN 83793	[illegible]	5-1-75

CODE IDENT NO.	SIZE	DWG NO	REV
21101	B	9180378	4T
SCALE —			SHEET 21 OF

	13	14	15	16	17
A	14.0 18.0 13.2 13.2 25.0 90.0 74S04	92.0 97.0 97.0 – – – 74S10	96.0 96.0 96.0 96.0 97.0 74S04	91.0 97.0 – – 128-001 SEL 7432	
B	14.0 – – – – – 3101A	90.0 90.0 92.0 95.0 – – 3001	92.0 99.0 100.0 – – – 74S11	92.0 – – – – 74H21	
C	12.0 13.2 18.2 25.0 – – 74H01	41.0 97.0 – – – – 74S74	91.0 91.0 – – – – 74S74	91.0 92.0 – – – – 74S112	
D	14.0 90.0 97.0 – (2 spares) 025-005 (130A)	92.0 92.0 92.0 92.0 – – 74S00	90.0 91.0 – – – – 74S112	91.0 91.0 – – – – 74H50	
E	14.0 – – – – – 3101A	92.0 92.0 – – – – 74S114	90.0 90.0 90.0 91.0 74S04	90.0 90.0 – – – – 74S74	
F	19.0 19.0 24.0 24.0 – – 74H01	97.0 – – – – – 74S64	12.0 91.0 97.0 95.0 – – 3002	90.0 90.0 – – – – 74H74	
G	14.0 – – – – – 3101A	98.0 97.0 97.0 108.0 – – 74S00	52.0 90.0 94.0 95.0 – – 74S00	94.0 94.0 94.0 94.0 – – 128-001 SEL. 7432	
H	20.0 20.0 23.0 23.0 – – 74H01	90.0 95.0 97.0 – – – 74S10	97.0 – – – – – 74H101	94.0 94.0 94.0 94.0 – – 74H00	
J	14.0 – – – (4 spares) 025-005 (130A)	90.0 97.0 97.0 – – – 74S11	97.0 – – – – – 74H101	93.0 94.0 – – – – 74S74	
K	14.0 45.0 – – – – 3101A	95.0 95.0 95.0 95.0 – – 74S00	94.0 95.0 96.0 97.0 99.0 102.0 74S04	52.0 95.0 95.0 95.0 – – 3001	
L	21.0 21.0 22.0 22.0 – – 74H01	102.0 – – – – – 3404	102.0 – – – – – 3404	95.0 – – – – – 74H55	92.0 95.0 – – – – 74S11
M	104.0 104.0 106.0 106.0 – – 74H04	101.0 – – – – – 3404	101.0 – – – – – 3404	95.0 95.0 93.0 – – – 74S10	91.0 91.0 92.0 95.0 – – 74300
N	104.0 – – – – – 74S153	102.0 – – – – – 3404	102.0 – – – 3404	101.0 – – – – – 3404	92.0 92.0 92.0 92.0 92.0 92.0 74S04
P	106.0 – – – – – 74S153	100.0 100.0 100.0 100.0 – – 128-001 SEL 7432	98.0 – – – – – 74153	101.0 – – – – – 3404	
R	101.0 – – – – – 74S153	100.0 – – – – – 74157	99.0 – – – – – 74153	98.0 99.0 – – – – 3404	93.0 93.0 – – – – 7485
S	104.0 – – – – – 74S153	100.0 100.0 100.0 100.0 – – 128-001 SEL 7433	98.0 – – – – – 74153	98.0 98.0 93.0 98.0 – – 128-001 SEL 7438	93.0 93.0 – – – – 7485
T	104.0 104.0 105.0 106.0 106.0 107.0 74H04	100.0 – – – – – 74157	99.0 – – – – – 74153	98.0 99.0 99.0 99.0 – – 128-001 SEL 7438	93.0 96.0 – – – – 74H40
U	105.0 – – – – – 74S153	100.0 100.0 100.0 100.0 – – 128-001 SEL 7433	98.0 – – – – – 74153	98.0 99.0 – – – – 3404	93.0 93.0 – – – – 7485
W	107.0 – – – – – 74S153	100.0 – – – – – 74157	99.0 – – – – – 74153	98.0 99.0 99.0 99.0 – – 128-001 SEL 7433	96.0 96.0 96.0 96.0 – – 128-001 SEL 7438
X	105.0 – – – – – 74S153	100.0 100.0 100.0 100.0 – – 128-001 SEL 7433	98.0 – – – – – 74153	96.0 93.0 99.0 – – – 3404	93.0 93.0 – – – – 7485
Y	107.0 – – – – – 74S153	100.0 – – – – – 74157	99.0 – – – – – 74153	96.0 98.0 98.0 99.0 – – 128-001 SEL 7433	96.0 – – – – – DM8551
Z	13	14	15	16	17

211011	B	9180378	AT
SCALE		SHEET 3.0	

	1	2	3	4	5	6
A	35.0 (A1) PROM 1	9.0 – – – / – – 93H72	9.0 – – – / – – 93H72	34.0 – – – / – – 74S64	85.0 – – – / – – 74S64	40.0 40.0 43.1 48.1 / – – 74S00
B	55.0 (B1) PROM 1	9.0 – – – / – – 93H72	74.0 87.0 – – / – – 74H74	57.0 – – – / – – 74S64	16.1 48.1 73.0 73.0 / – – 74H00	9.0 18.1 40.0 40.0 / – – 74S00
C	56.0 (C1) PROM 1	9.0 – – – / – – 93H72	10.0 – – – / – – 93H72	11.0 57.0 65.0 – / – – 74S11	84.0 – – – / – – 74S64	18.1 40.0 42.1 48.0 / – – 3001
D	56.0 (D1) PROM 1	10.0 – – – / – – 93H72	65.0 65.0 75.0 86.0 / – – 3001	57.0 65.0 65.0 – / – – 74S10	57.0 57.0 65.0 65.0 / – – 74S00	11.0 – – – / – – 93H72
E	56.0 (E1) PROM 1	65.0 65.0 65.0 65.0 / – – 74S00	65.0 75.0 75.0 75.0 / – – 74S00	57.0 61.0 65.0 65.0 / 65.0 75.0 74S04	76.0 84.0 84.0 – / – – 74H11	16.1 – – – / – – 74157
F	54.0 (F1) PROM 1	64.0 – – – / – – 93H72	48.1 75.0 75.0 – / – – 74S11	75.0 75.0 87.0 89.0 / – – 3001	57.0 65.0 75.0 75.0 / 75.0 75.0 74S04	48.0 – – – / – – 74H30
H	54.0 (H1) PROM 1	64.0 – – – / – – 93H72	74.0 74.0 74.0 74.0 / 87.0 87.0 74S04	64.0 67.0 74.0 74.0 / – – 3001	75.0 75.0 74.0 – / – – 74S11	11.0 11.0 11.0 11.0 / 43.0 48.1 74H04
J	54.0 (J1) PROM 1	63.0 – – – / – – 93H72	63.0 – – – / – – 93H72	74.0 75.0 75.0 75.0 / 87.0 88.0 74S04	76.0 76.0 84.0 – / – – 74S11	49.0 49.0 – – / – – 74S20
K	53.0 (K1) PROM 1	62.0 – – – / – – 93H72	65.0 87.0 87.0 – / – – 74S10	76.0 84.0 84.0 84.0 / – – 3001	76.0 76.0 76.0 – / – – 74S11	49.0 49.0 – – / – – 74S20
L	53.0 (L1) PROM 1	61.0 – – – / – – 93H72	62.0 – – – / – – 93H72	74.0 PROM 1	74.0 89.0 89.0 – / – – 74S10	49.0 49.0 – – / – – 74S74
M	53.0 (M1) PROM 1	87.0 – – – / – – 74S64	87.0 88.0 – – / – – 74H74	74.0 PROM 1	89.0 89.0 – – / – – 74S20	49.0 49.0 – – / – – 74S74
N	61.0 – – – / – – 93H72	58.0 – – – / – – 74S65	78.0 – – – / – – 74S65	77.0 79.0 79.0 79.0 / – – 74S03	89.0 89.0 – – / – – 74H74	50.0 – – – / – – 743158
P	58.0 58.0 58.0 58.0 / – – 74S03	59.0 – – – / – – 74S65	78.0 – – – / – – 74S65	58.0 74.0 78.0 79.0 (No Spares) 025-005 (330Ω)	88.0 88.0 88.0 88.0 / 74H05	50.0 50.0 – / – – 74S10
R	50.0 62.0 76.0 78.0 / 87.0 87.0 74S04	59.0 – – – / – – 74S65	59.0 65.0 78.0 – / 59.0 77.0 79.0 – (No Spares) 025-005 (330Ω)	77.0 77.0 79.0 79.0 / – – 74S03	78.0 79.0 79.0 84.0 / – – 74S03	21.0 – – – / – – 74H54
S	58.0 80.0 82.0 89.0 60.0 81.0 83.0 – (No Spares) 025-005 (330Ω)	60.0 – – – / – – 74S65	77.0 – – – / – – 74S65	73.0 PROM 1	15.0 77.0 76.0 89.0 (1 Spare) 025-005 (330Ω)	29.0 – – – / – – 74H54
T	80.0 81.0 82.0 83.0 / – – 74H01	60.0 – – – / – – 74S65	77.0 – – – / – – 74S65	73.0 PROM 1	76.0 76.0 76.0 76.0 / – – 74S00	28.0 – – – / – – 74H54
U	80.0 81.0 82.0 83.0 / – – 74H01	72.0 – – – / – – 74151	72.0 – – – / – – 74151	67.0 – – – / – – 7475	50.0 – – – / – – 74S64	28.0 – – – / – – 74H54
W	83.0 – – – / – – 74151	71.0 – – – / – – 74151	71.0 – – – / – – 74151	67.0 – – – / – – 7475	58.0 – – – / – – 74S64	27.0 – – – / – – 74H54
X	82.0 – – – / – – 74151	70.0 – – – / – – 74151	70.0 – – – / – – 74151	51.0 – – – / – – 74H30	15.0 – – – (No Spares) 025-005 (330Ω)	27.0 – – – / – – 74H54
Y	81.0 – – – / – – 74151	69.0 – – – / – – 74151	69.0 – – – / – – 74151	66.0 – – – / – – 7475	50.0 75.0 87.0 / – – 74S00	26.0 – – – / – – 74H54
Z	80.0 – – – / – – 74151	68.0 – – – / – – 74151	68.0 – – – / – – 74151	66.0 – – – / – – 7475	14.0 – – – / – – DM8551	26.0 – – – / – – 74H54

1 FOR PROM PART NO. USED ON 44P0614-000
SEE PARTS LIST 44P0614
FOR PROM PART NO. USED ON 44P0614-001
SEE OPTION DWG 01A1351.

CODE IDENT NO.	SIZE	DWG NO	REV
21101	B	9180378	AT
SCALE		SHEET 4.0 OF	

	7	8	9	10	11	12
A	42.0 42.0 43.1 74.0 – – 3001	43.0 – – – – – 74S139	43.0 42.0 – – 3001	90.0 90.0 – – 9002	13.2 – – – – – 74E64	18.2 – – – – – 74964
B	12.0 43.0 43.0 – – 74S03	10.0 10.0 14.0 18.1 43.0 43.0 74S04	18.1 74.0 – – – – 74S20	73.0 73.0 – – – – 74H74	18.0 – – – – – 74H54	25.0 – – – – – 74H54
C	18.2 – – – – – S151	18.1 48.0 – – – – 74S112	18.1 18.1 18.1 18.1 – – 74S00	16.0 41.0 – – – – 74S20	19.0 – – – – – 74H54	24.0 – – – – – 74H54
D	18.2 – – – – – 74S157	10.0 10.0 – – – – 74S114	10.0 10.0 – – – – 74S114	16.0 16.0 16.0 16.0 16.0 16.0 74H04	19.0 – – – – – 74H54	24.0 – – – – – 74H54
E	44.0 – – – – – 74157	18.0 48.0 67.0 – – – 74S11	10.0 10.0 10.0 18.1 38.0 86.0 74S04	12.0 12.0 – – – – 74S40	19.0 19.0 20.0 21.0 21.0 23.0 74S04	23.0 – – – – – 74H54
F	41.0 43.0 – – – – 74H74	11.0 17.0 17.0 17.0 – – 3001	12.0 16.0 16.0 16.0 – – 74S00	45.0 – – – – – 93S16	20.0 – – – – – 74H54	20.0 22.0 22.0 23.0 24.0 24.0 74S04
H	41.0 43.0 52.0 76.0 – – 74S00	16.0 16.1 41.0 48.1 89.0 89.0 74S04	16.0 16.0 79.0 – – – 74S10	45.0 – – – – – 93S16	20.0 – – – – – 74H54	23.0 – – – – – 74H54
J	16.1 49.0 52.0 – – – 74S11	16.0 17.0 – – – – 74S139	16.0 16.0 17.0 17.0 – – 3002	45.0 – – – – – 93S16	21.0 – – – – – 74H54	22.0 – – – – – 74H54
K	52.0 – – – – – 74S151	17.0 17.0 17.0 17.0 17.0 43.0 74S04	41.0 44.0 – – – – 74H51	45.0 – – – – – 93S16	21.0 – – – – – 74H54	22.0 – – – – – 74H54
L	52.0 – – – – – 74S151	10.0 10.0 41.0 43.0 52.0 76.0 74S04	51.0 – – – – – 74175	39.0 096-001 74181 PC	32.0 096-001 74181 PC	
M	19.1 52.0 – – – – 74S74	13.0 – – – – – 74S158	48.1 74S151			
N	52.0 52.0 – – – – 74S74	52.0 – – – (8 spares) 025-005 (330Ω)	41.0 41.0 – – – – 74153	39.0 096-001 74181 PC	38.0 096-001 74181 PC	
P	50.0 – – – – – 74S158	43.0 50.0 – – – – 74H21	42.0 – – – – – 74194	41.0 – – – – – 3404	39.0 – – – – – 74182	104.0 104.0 106.0 106.0 – – 123-001 SEL. 7433
R	33.0 – – – – – 74H54	15.0 – – – – – 3101A	47.0 47.0 47.0 47.0 – – 3002	37.0 74151	35.0 74151	108.0 – – – – – 74194
S	33.0 – – – – – 74H54	28.0 29.0 29.0 32.0 33.0 33.0 74S04	42.0 – – – – – 74194	37.0 74151	35.0 74151	104.0 104.0 106.0 106.0 – – 128-001 SEL. 7433
T	32.0 – – – – – 74H54	15.0 – – – – – 3101A	47.0 – – – – – 74H30	37.0 74151	35.0 74151	108.0 – – – – – 74194
U	32.0 – – – – – 74H54	38.0 42.0 42.0 – – – 74S11	46.0 – – – – – AM74161	37.0 74151	35.0 74151	105.0 105.0 107.0 107.0 – – 128-001 SEL. 7433
W	31.0 – – – – – 74H54	27.0 28.0 31.0 32.0 43.0 51.0 74S04	42.0 – – – – – 74194	36.0 74151	34.0 7415:	108.0 – – – – – 74194
X	31.0 – – – – – 74H54	15.0 – – – – – 3101A	47.0 47.0 47.0 47.0 – – 3002	36.0 74151	34.0 74151	105.0 105.0 105.0 107.0 107.0 107.0 74H04
Y	30.0 – – – – – 74H54	26.0 26.0 27.0 30.0 30.0 31.0 74S04	42.0 – – – – – 74194	36.0 74151	34.0 74151	105.0 105.0 107.0 107.0 – – 128-001 SEL. 7433
Z	30.0 – – – – – 74H54	15.0 – – – – – 3101A	46.0 – – – – – AM74161	36.0 74151	34.0 74151	108.0 – – – – – 74194

CODE IDENT NO.	SIZE	DWG NO	REV
21101	B	9180378	AT
SCALE		SHEET 5, OF	

2 1

D

C

B

A

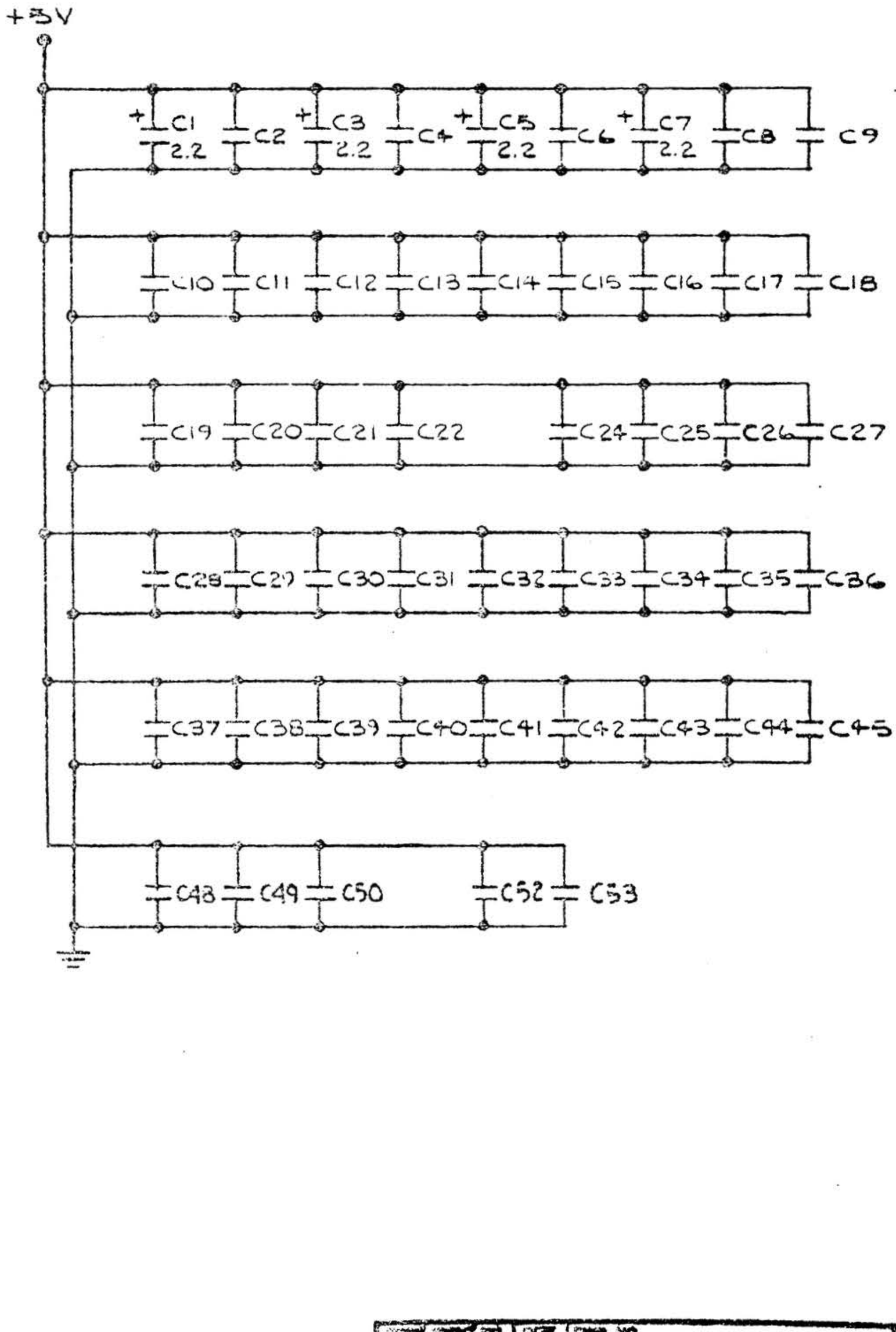

21101	B	91B0378	AT
SCALE			SHEET 8 OF

2 1

+5V

R2
330Ω

VOBDO1+ 10.0,11.0,65.0,74.0 87.0

55.0	CBI31+	7 P3	Q3 12	CBIMO+ 75.0 86.0,89.0,97.0
55.0	CBI30+	6 P2	Q2 13	DGLB1+ 17.0,44.0
55.0	CBI29+	5 P1	Q1 14	DGLB0+ 17.0
55.0	CBI28+	4 P0	Q0 15	DGLA1+ 16.0,43.0
			Q3 11	
		CP	MR	
			10 1	

A2 (1)

55.0	CBI27+	7 P3	Q3 12	DGLA0+ 16.0,18.1
55.0	CBI26+	6 P2	Q2 13	DGRC2+ 43.0
55.0	CBI25+	5 P1	Q1 14	DGRC1+ 43.0
55.0	CBI24+	4 P0	Q0 15	DGRC0+ 43.0
			Q3 11	
		CP	MR	
			10 1	

A3 (1)

55.0	CBI23+	7 P3	Q3 12	DFUN3+ 38.0,39.0,48.1
55.0	CBI22+	6 P2	Q2 13	DFUN2+ 38.0,39.0
55.0	CBI21+	5 P1	Q1 14	DFUN1+ 16.1,44.0
55.0	CBI20+	4 P0	Q0 15	DFUN0+ 16.1
			Q3 11	
		CP	MR	
			10 1	

B2 (1)

55.0	CBI19+	7 P3	Q3 12	DGMD+ 26.0,44.0
55.0	CBI18+	6 P2	Q2 13	DCRY1+ 26.0,44.0
55.0	CBI17+	5 P1	Q1 14	DCRY0+ 11.0,27.0,44.0
55.0	CBI16+	4 P0	Q0 15	DWCF+ 27.0,44.0
			Q3 11	
		CP	MR	
			10 1	

C2 (1)

89.0 KKC2+ — 13, 12 — B6 — 11

DKABB- 10.0,11.0

RØM BUFFER 31-16

(1) A2, A3, B2 & C2 ARE 4 BIT SHIFT REG.

CODE IDENT NO.	SIZE	DWG NO	REV
21101	B	91B0378	AT
SCALE		SHEET 9.0	

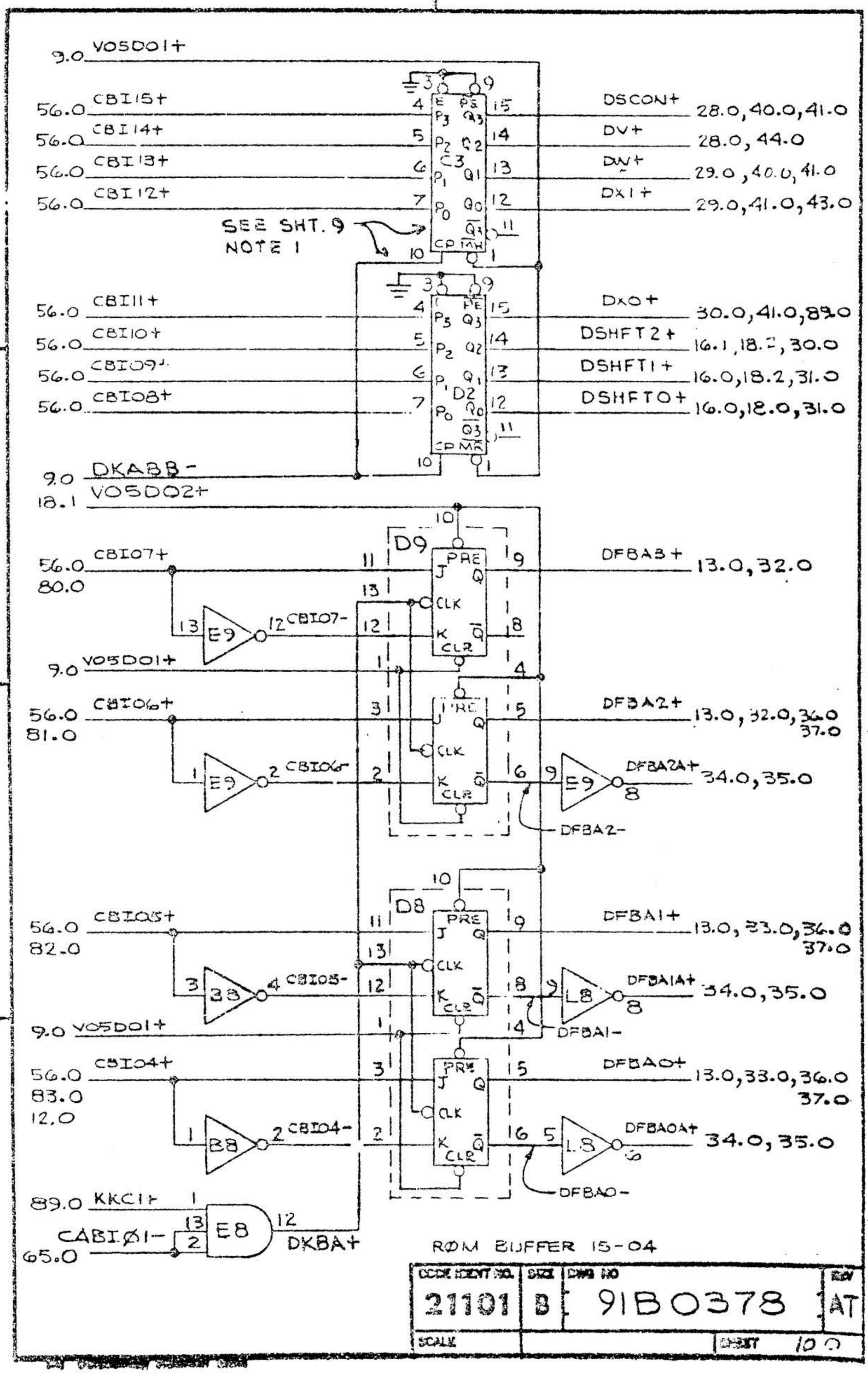
9.0 VO5DO1+
56.0 CBI15+
56.0 CBI14+
56.0 CBI13+
56.0 CBI12+
SEE SHT. 9 NOTE 1
C3
DSCON+ 28.0,40.0,41.0
DV+ 28.0,44.0
DN+ 29.0,40.0,41.0
DX1+ 29.0,41.0,43.0
56.0 CBI11+
56.0 CBI10+
56.0 CBI09+
56.0 CBI08+
DX0+ 30.0,41.0,89.0
DSHFT2+ 16.1,18.2,30.0
DSHFT1+ 16.0,18.2,31.0
DSHFT0+ 16.0,18.0,31.0
9.0 DKABB-
18.1 VO5DO2+
D9
56.0 CBI07+
80.0
DFBAB+ 13.0,32.0
E9
CBI07-
9.0 VO5DO1+
56.0 CBI06+
81.0
DFBA2+ 13.0,32.0,36.0 37.0
CBI06-
DFBA2A+ 34.0,35.0
DFBA2-
D8
56.0 CBI05+
82.0
DFBA1+ 13.0,33.0,36.0 37.0
B8
CBI05-
DFBA1A+ 34.0,35.0
L8
DFBA1-
9.0 VO5DO1+
56.0 CBI04+
83.0
12.0
DFBA0+ 13.0,33.0,36.0 37.0
CBI04-
DFBA0A+ 34.0,35.0
L8
DFBA0-
89.0 KKC1+
CABIØ1-
65.0
E8
DKBA+
RØM BUFFER 15-04
21101
B
91B0378
AT
SCALE
SHEET 10

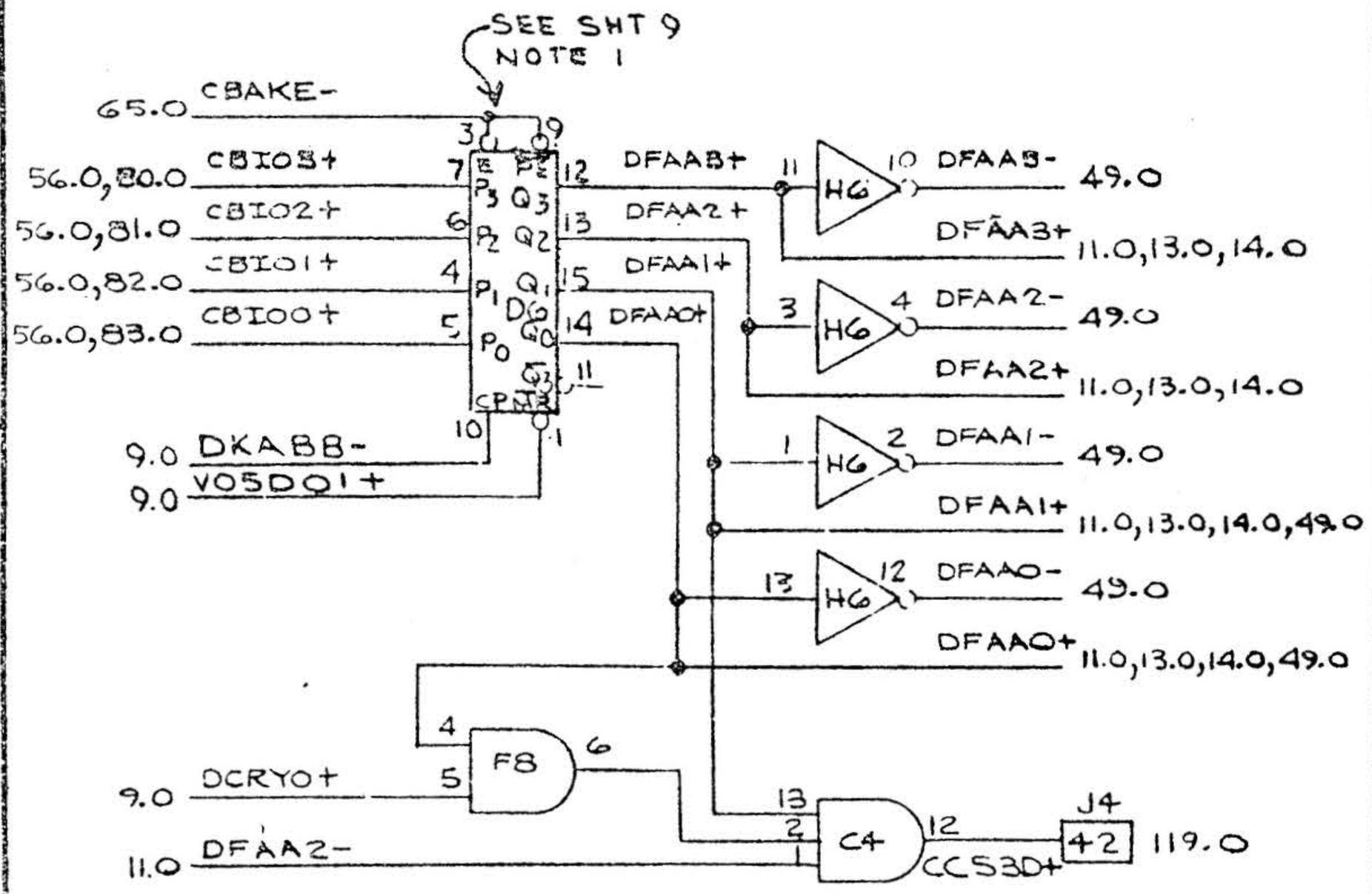

RØM BUFFER 08-00

CODE IDENT NO.	SIZE	DWG NO	REV
21101	B	91B0378	AT
SCALE		SHEET 11.0	

41.0 DDQS-
65.0 CIMDEN-
B7
CBI04+ 10.0, 56.0, 118.0, 83.0

89.0 KKCI+
44.0 DEKWCF+
F9
DWCN- 14.0, 15.0

97.0 MFLCI-
97.0 MDRR+
92.0 MCPB+
94.0 MCDTC-
E10
DFLCC+ 16.0, 17.0, 26.0, 28.0, 29.0, 30.0, 31.0, 32.0, 33.0

E10
DFLC+ 13.0, 18.0, 19.0, 20.0, 21.0, 22.0, 23.0, 24.0, 25.0

FILE CONTROL

CODE IDENT NO.	SIZE	DWG NO	REV
21101	B	91B0378	AT
SCALE			SHEET 12.0

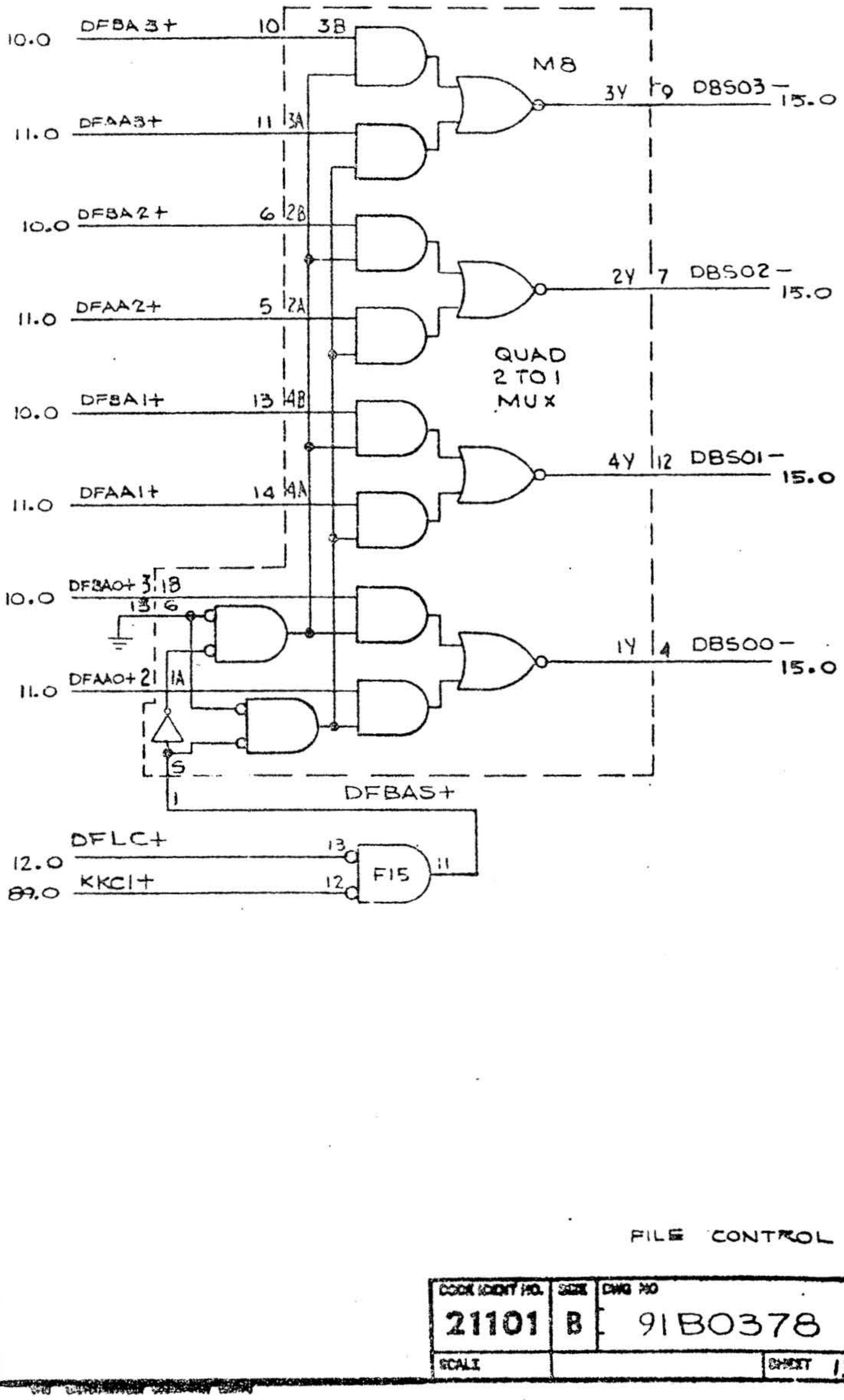

FILE CONTROL

COCK IDENT NO.	SIZE	DWG NO	REV
21101	B	91B0378	AT
SCALE		SHEET 13.0	

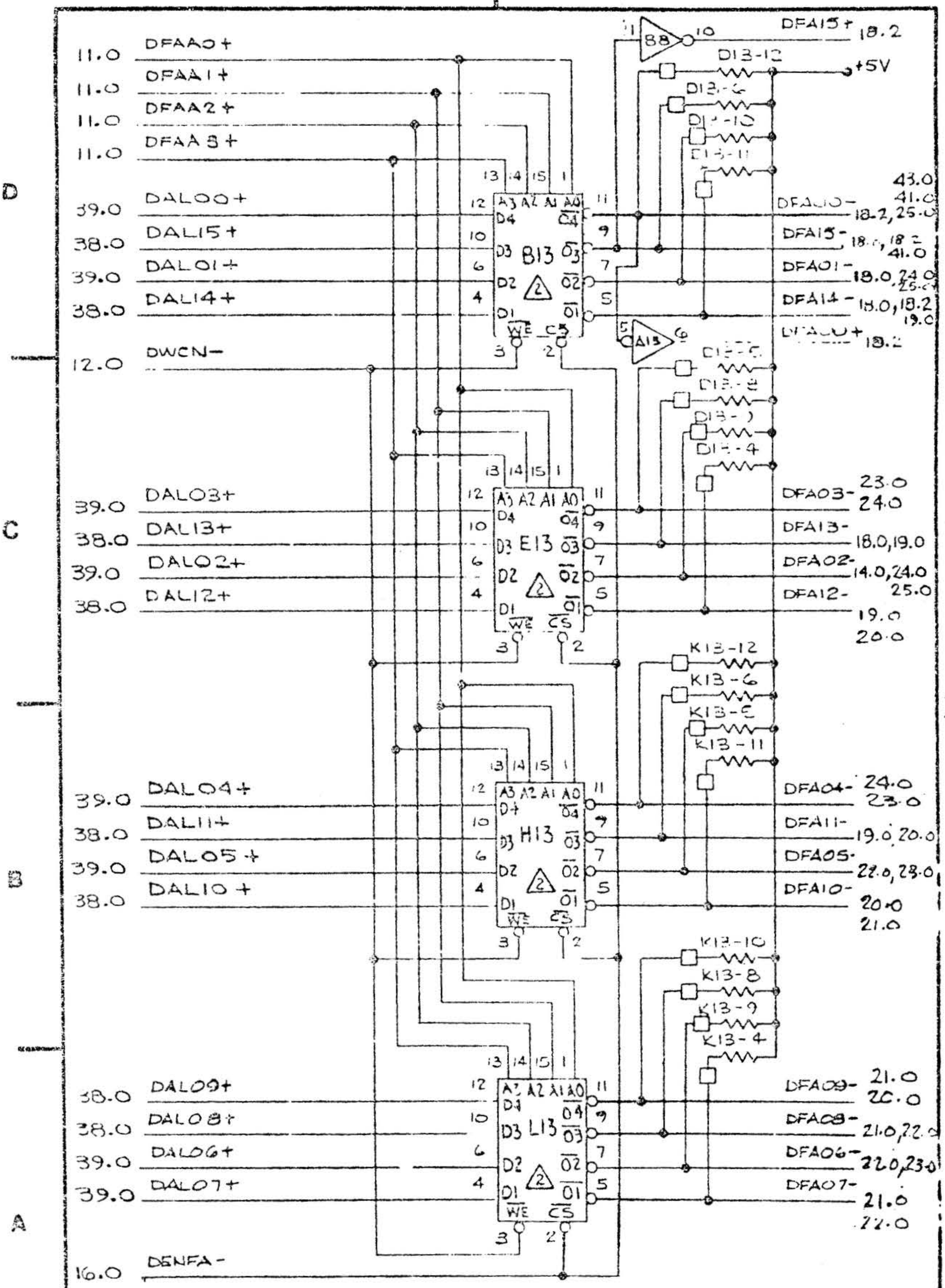
2
1
D
C
B
A
11.0 DFAA0+
11.0 DFAA1+
11.0 DFAA2+
11.0 DFAA3+
39.0 DAL00+
38.0 DAL15+
39.0 DAL01+
38.0 DAL14+
12.0 DWCN-
39.0 DAL03+
38.0 DAL13+
39.0 DAL02+
38.0 DAL12+
39.0 DAL04+
38.0 DAL11+
39.0 DAL05+
38.0 DAL10+
38.0 DAL09+
38.0 DAL08+
39.0 DAL06+
39.0 DAL07+
16.0 DENFA-
B13
E13
H13
L13
A13
B8
DFA15+ 18.2
DFA10- 18.2, 25.0
DFA15- 18.0, 18.2 41.0
DFA01- 18.0, 24.0 25.0
DFA14- 18.0, 18.2 19.0
DFA00+ 18.2
DFA03- 23.0 24.0
DFA13- 18.0, 19.0
DFA02- 14.0, 24.0 25.0
DFA12- 19.0 20.0
DFA04- 24.0 23.0
DFA11- 19.0, 20.0
DFA05- 22.0, 23.0
DFA10- 20.0 21.0
DFA09- 21.0 20.0
DFA08- 21.0, 22.0
DFA06- 22.0, 23.0
DFA07- 21.0 22.0
+5V
△2 B13, E13, H13, L13 ARE 64 BIT RAM
CODE IDENT NO. 21101
SIZE B
DWG NO 9180378
REV AT
SCALE
SHEET 4.0

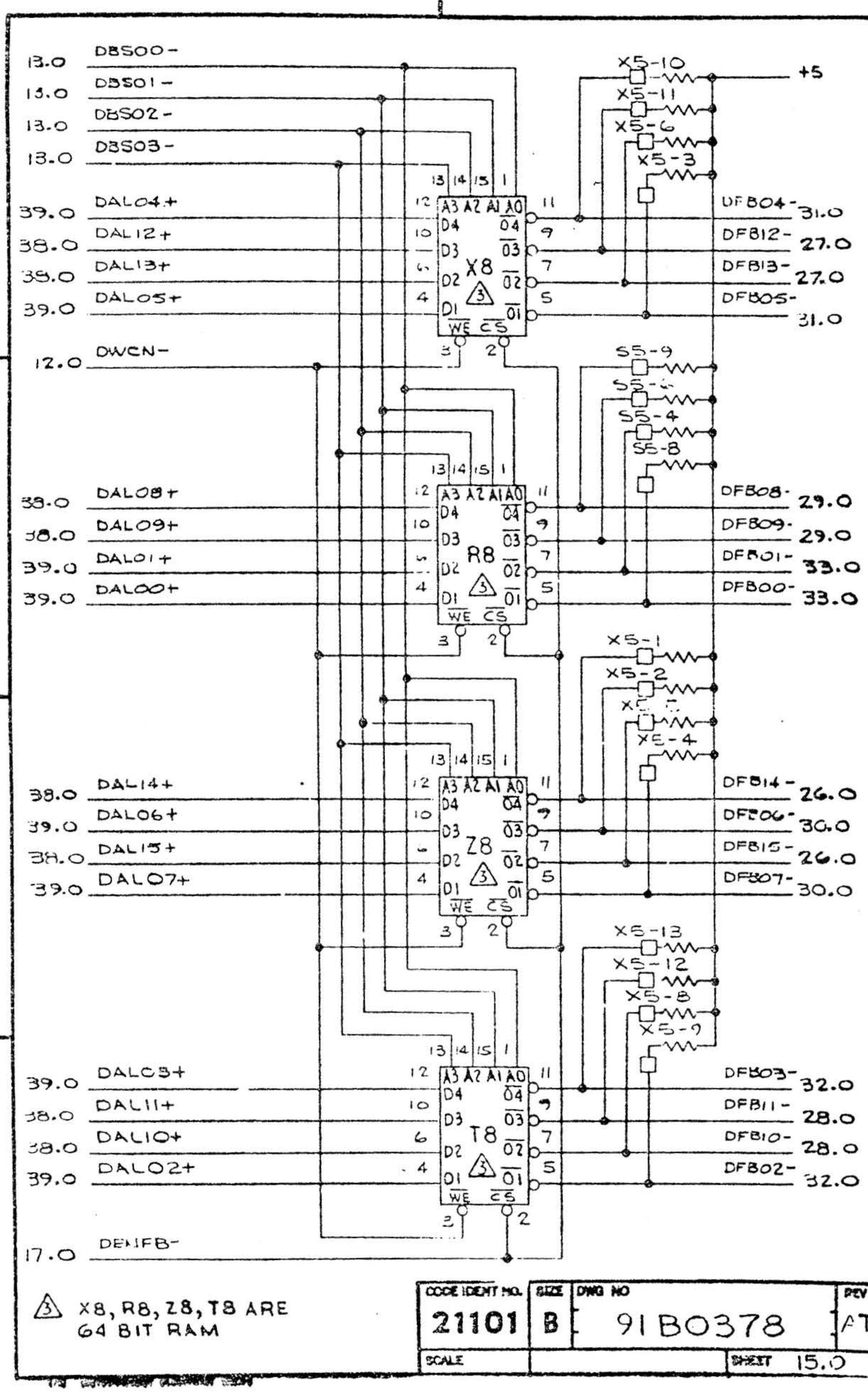
2
1
D
C
B
A
13.0 DBS00-
13.0 DBS01-
13.0 DBS02-
13.0 DBS03-
39.0 DAL04+
38.0 DAL12+
38.0 DAL13+
39.0 DAL05+
12.0 DWCN-
38.0 DAL08+
38.0 DAL09+
39.0 DAL01+
39.0 DAL00+
38.0 DAL14+
39.0 DAL06+
38.0 DAL15+
39.0 DAL07+
39.0 DAL03+
38.0 DAL11+
38.0 DAL10+
39.0 DAL02+
17.0 DENFB-
X8
R8
Z8
T8
A3 A2 A1 A0
D4 D3 D2 D1
WE CS
X5-10
X5-11
X5-6
X5-3
+5
DFB04- 31.0
DFB12- 27.0
DFB13- 27.0
DFB05- 31.0
S5-9
S5-6
S5-4
S5-8
DFB08- 29.0
DFB09- 29.0
DFB01- 33.0
DFB00- 33.0
X5-1
X5-2
X5-4
DFB14- 26.0
DFB06- 30.0
DFB15- 26.0
DFB07- 30.0
X5-13
X5-12
X5-8
X5-7
DFB03- 32.0
DFB11- 28.0
DFB10- 28.0
DFB02- 32.0
△3 X8, R8, Z8, T8 ARE 64 BIT RAM
CODE IDENT NO. 21101
SIZE B
DWG NO 91B0378
REV AT
SCALE
SHEET 15.0

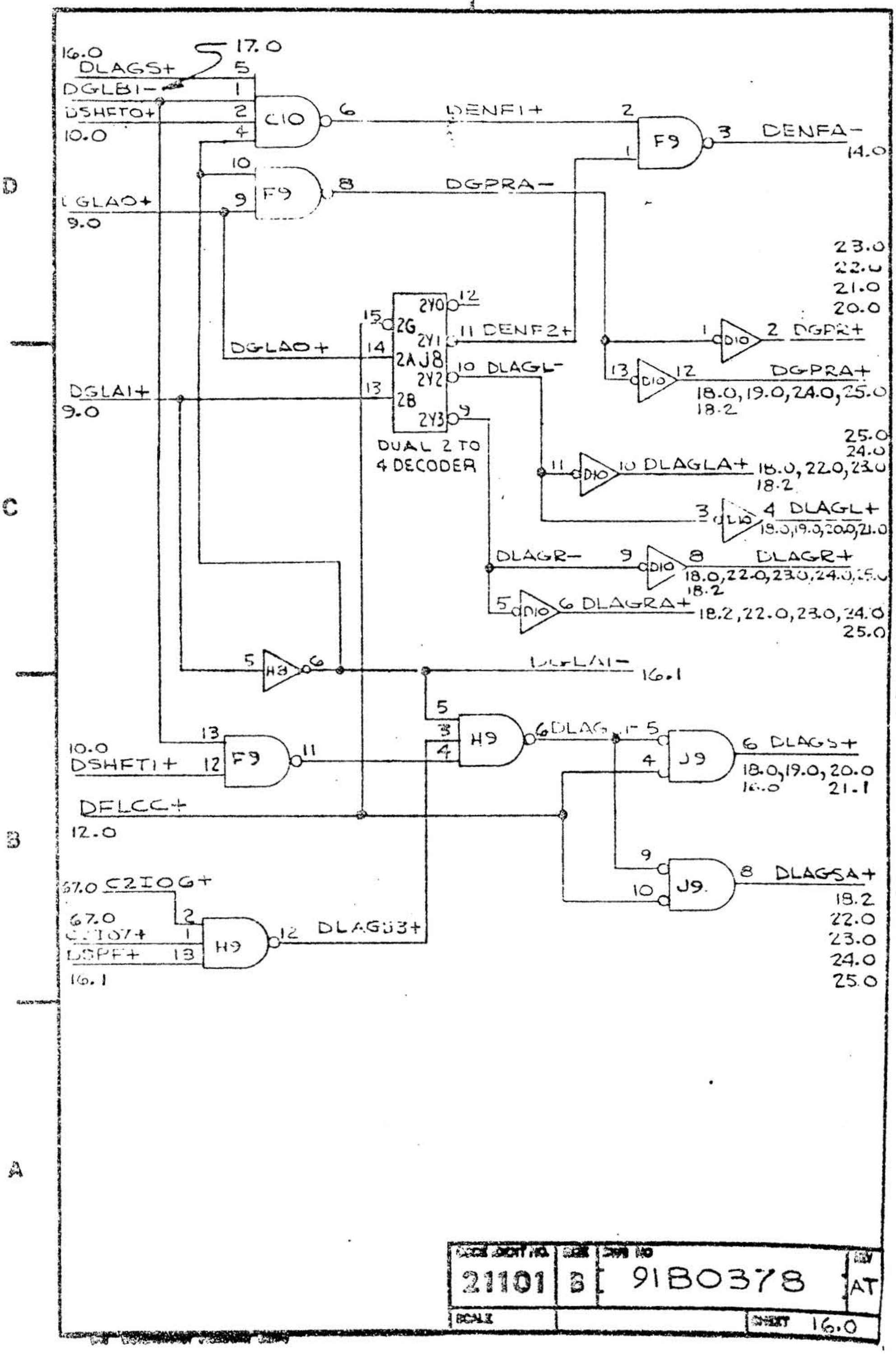
16.0
DLAGS+
17.0
5
DGLB1-
1
DSHFT0+
2
10.0
4
C10
6
DENF1+
2
F9
3
DENFA-
14.0
1
10
F9
8
DGPRA-
DGLA0+
9
9.0
23.0
22.0
21.0
20.0
2Y0
12
15
2G
2Y1
11 DENF2+
DGLA0+
14
2A J8
2Y2
10 DLAGL-
DGLA1+
13
2B
2Y3
9
9.0
DUAL 2 TO
4 DECODER
1
D10
2 DGPR2+
13
D10
12
DGPRA+
18.0,19.0,24.0,25.0
18.2
25.0
24.0
11
D10
10 DLAGLA+
18.0,22.0,23.0
18.2
3
D10
4 DLAGL+
18.0,19.0,20.0,21.0
DLAGR-
9
D10
8
DLAGR+
18.0,22.0,23.0,24.0,25.0
18.2
5
D10
6 DLAGRA+
18.2,22.0,23.0,24.0
25.0
5
H8
6
DGLA1-
16.1
5
3
H9
6 DLAG
4
10.0
13
DSHFT1+
12
F9
11
DFLCC+
12.0
9
10
J9
8 DLAGSA+
18.2
22.0
23.0
24.0
25.0
67.0 C2IOG+
67.0
C2IOG+
2
1
DSPF+
13
H9
12
DLAGJ3+
16.1
6 DLAGS+
18.0,19.0,20.0
16.0
21.1
21101
B
91B0378
AT
SCALE
SHEET 16.0

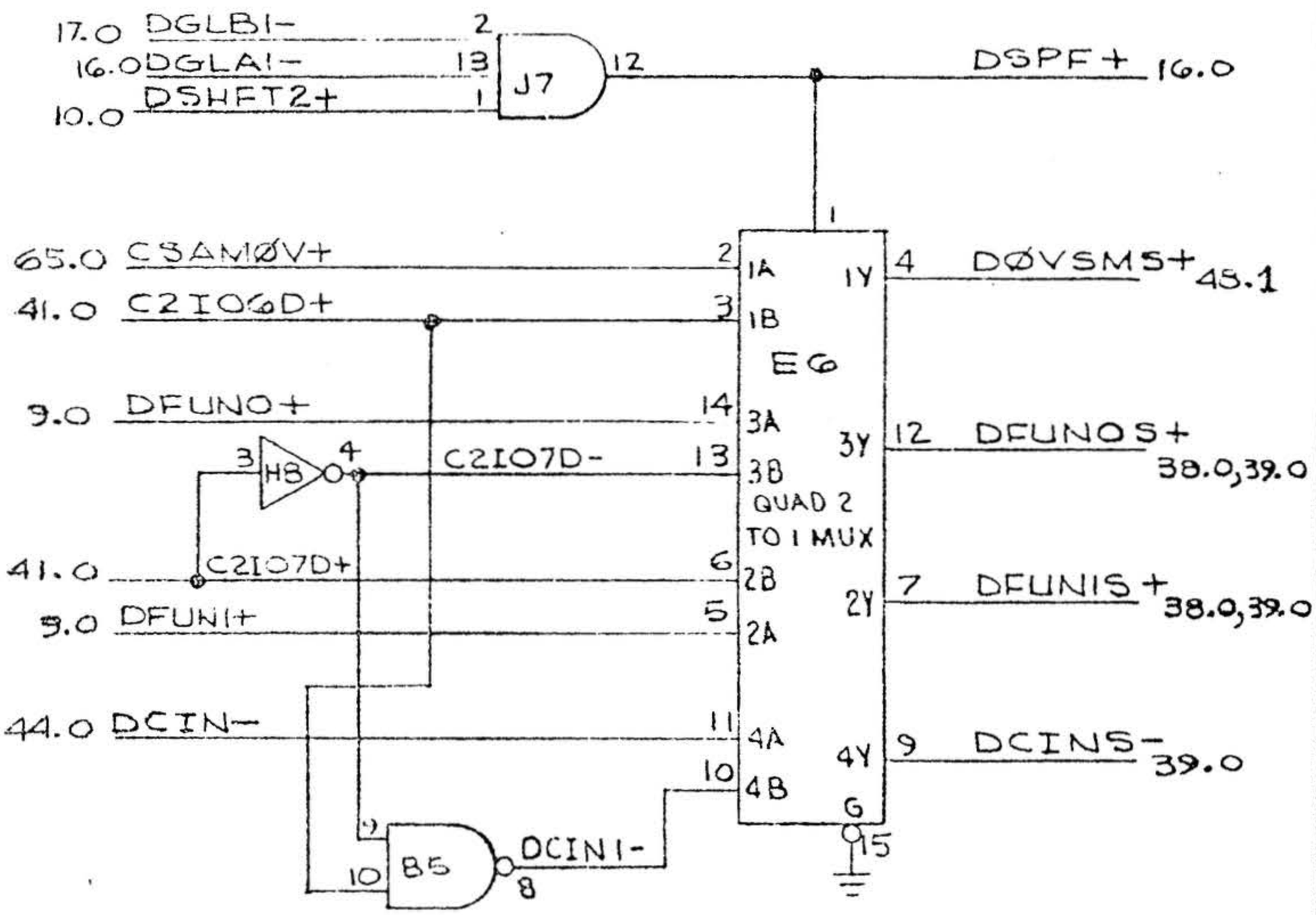

CODE IDENT NO.	SIZE	DWG NO	REV
21101	B	91B0378	A.T
SCALE		SHEET 16.1	

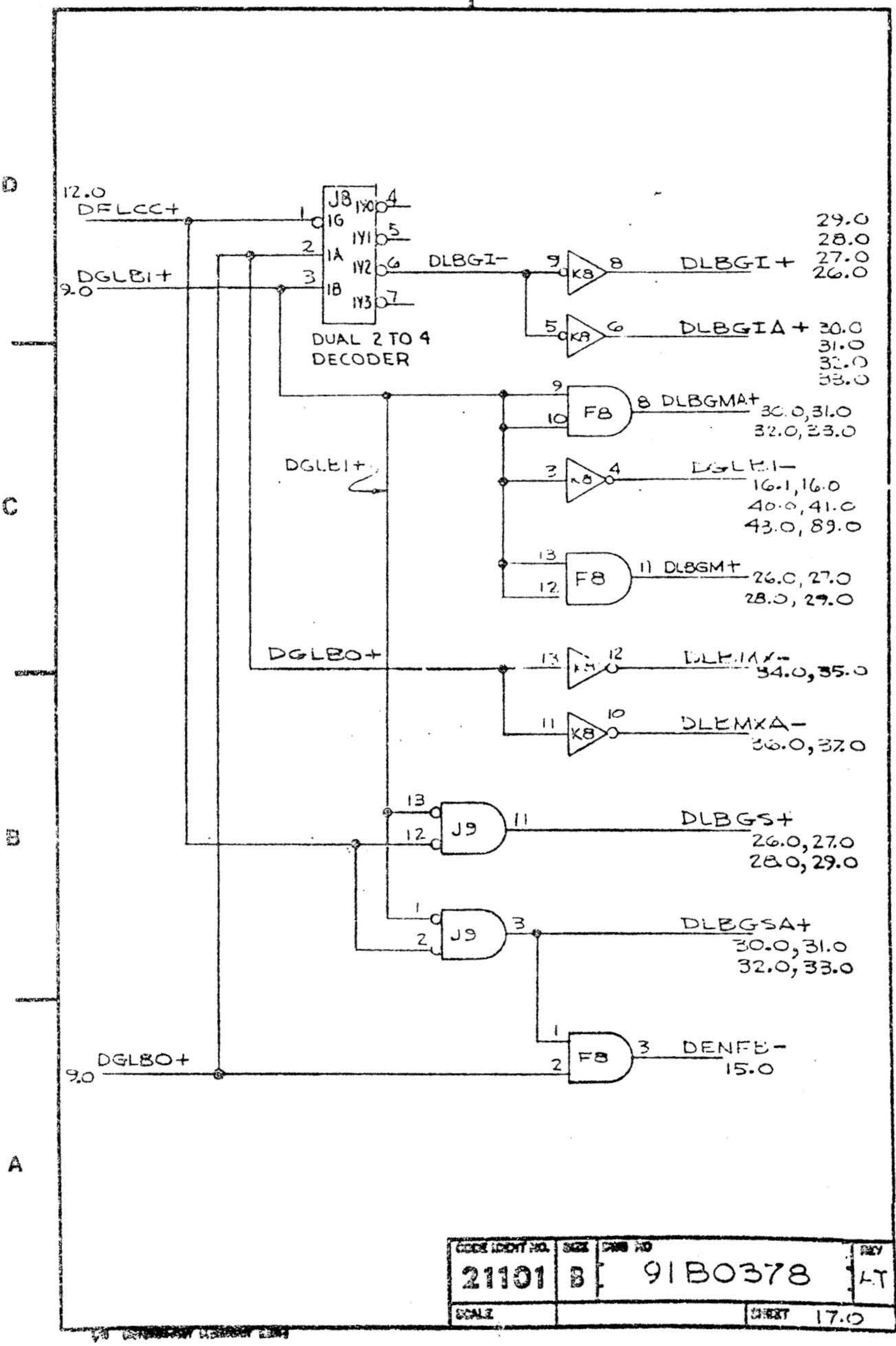
12.0
DFLCC+
DGLBI+
9.0
J8
1G
1A
1B
1Y0
1Y1
1Y2
1Y3
DUAL 2 TO 4
DECODER
DLBGI-
DLBGI+
29.0
28.0
27.0
26.0
DLBGIA+
30.0
31.0
32.0
33.0
DLBGMA+
30.0,31.0
32.0,33.0
DGLBI+
DGLBI-
16.1,16.0
40.0,41.0
43.0,89.0
DLBGM+
26.0,27.0
28.0,29.0
DGLBO+
DLBMXA-
34.0,35.0
DLBMXA-
36.0,37.0
J9
DLBGS+
26.0,27.0
28.0,29.0
J9
DLBGSA+
30.0,31.0
32.0,33.0
DGLBO+
9.0
F8
DENFB-
15.0
21101
B
91B0378
REV
LT
SCALE
SHEET 17.0

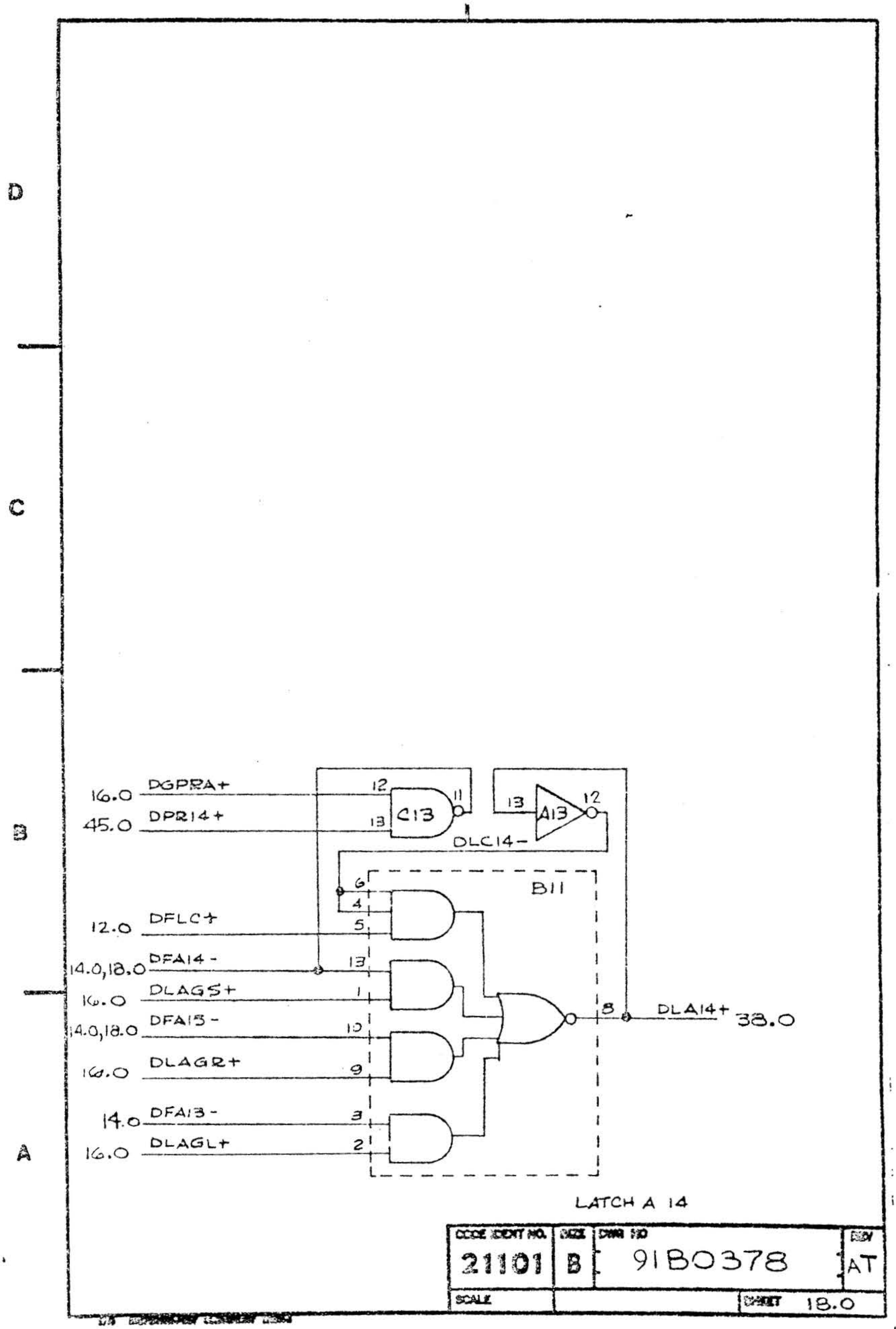
16.0 DGPRA+
45.0 DPR14+
12.0 DFLC+
14.0,18.0 DFA14-
16.0 DLAGS+
14.0,18.0 DFA15-
16.0 DLAGR+
14.0 DFA13-
16.0 DLAGL+
12
11
C13
13
13
A13
12
DLC14-
B11
6
4
5
13
1
10
9
3
2
8
DLA14+
38.0
LATCH A 14
CODE IDENT NO.
21101
SIZE
B
DWG NO
91B0378
REV
AT
SCALE
SHEET
18.0

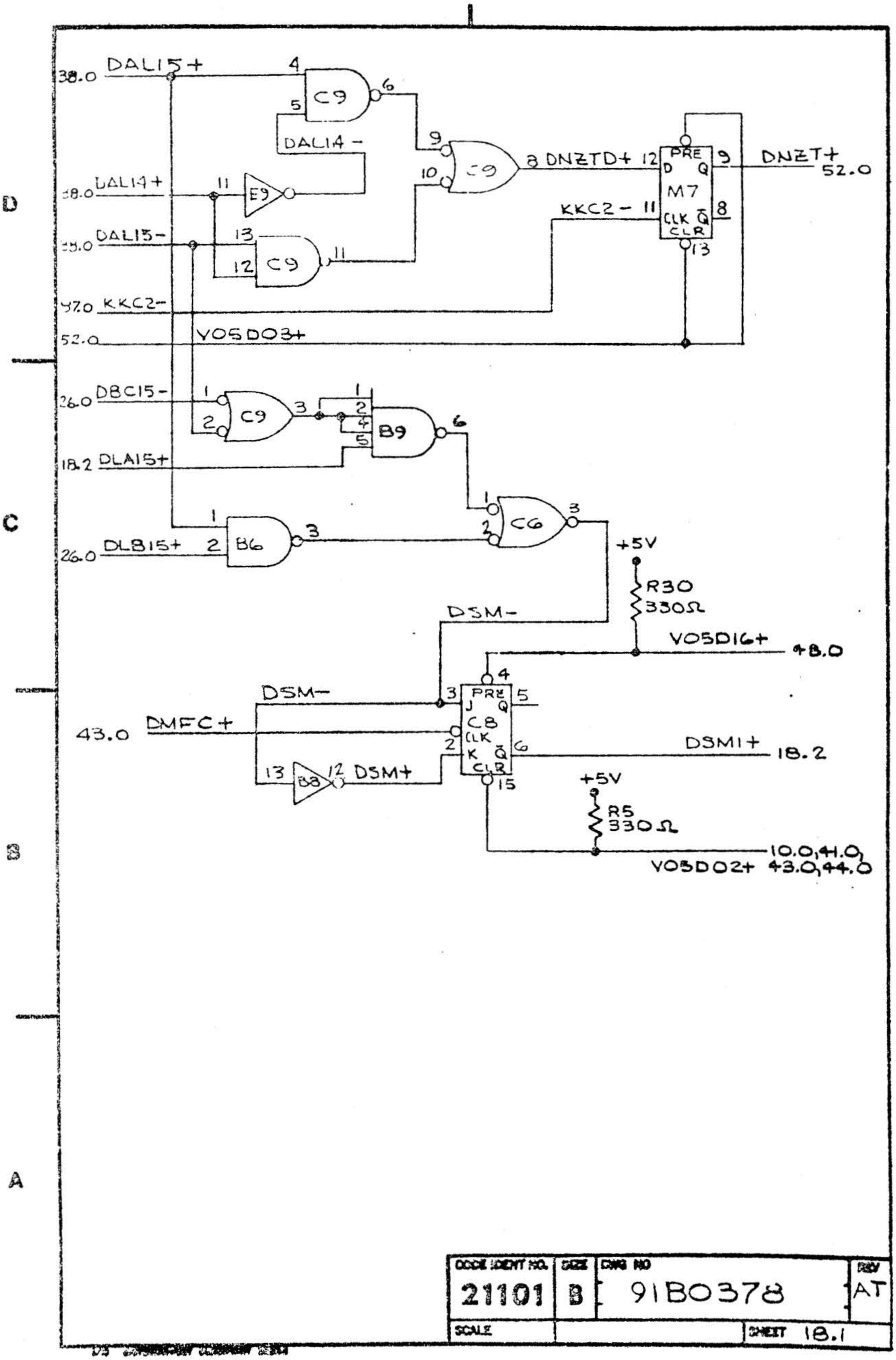

DCCE IDENT NO.	SIZE	DWG NO	REV
21101	B	91B0378	AT
SCALE		SHEET 18.1	

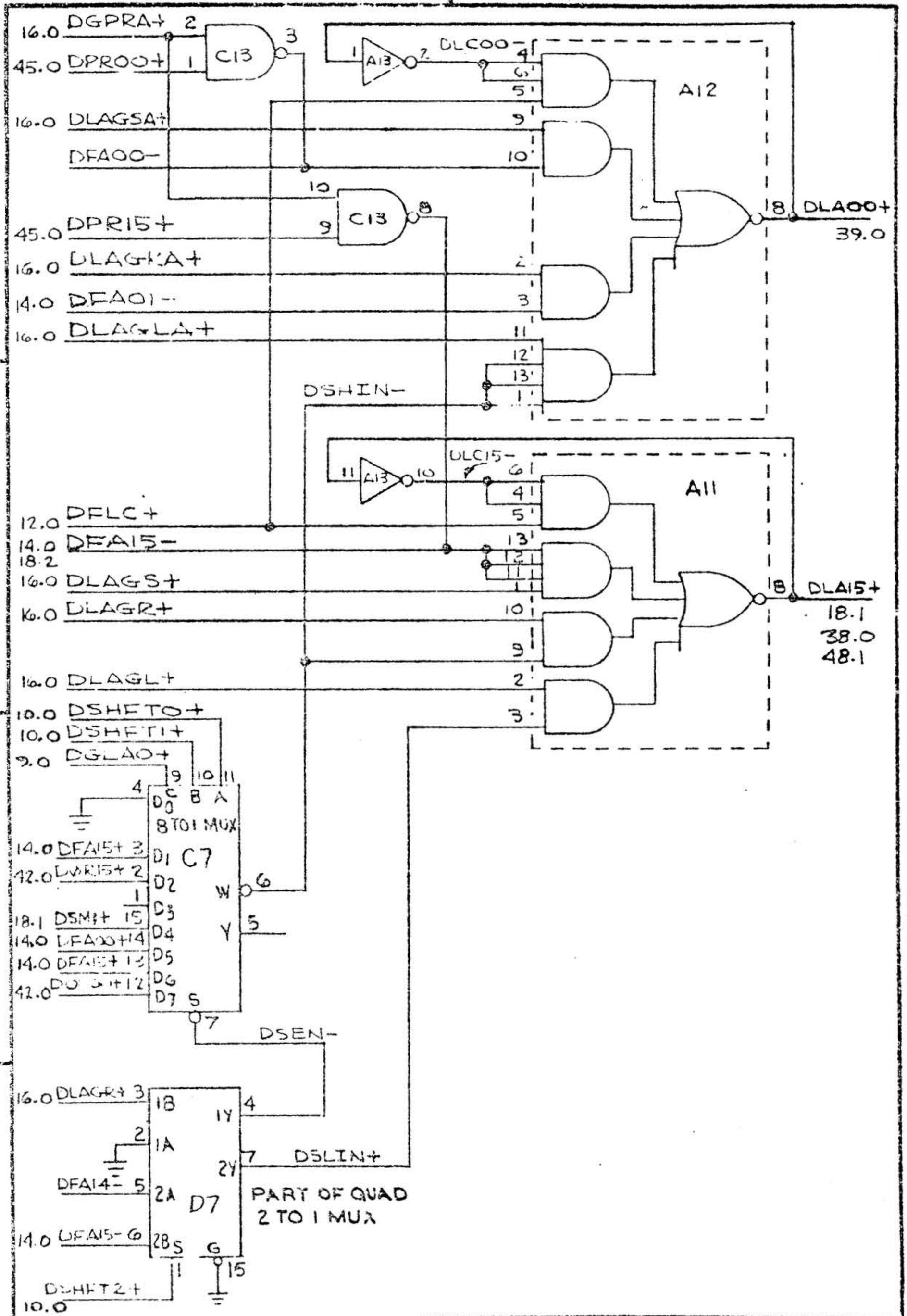

21101	B	9180378	AT
SCALE			SHEET 18.2

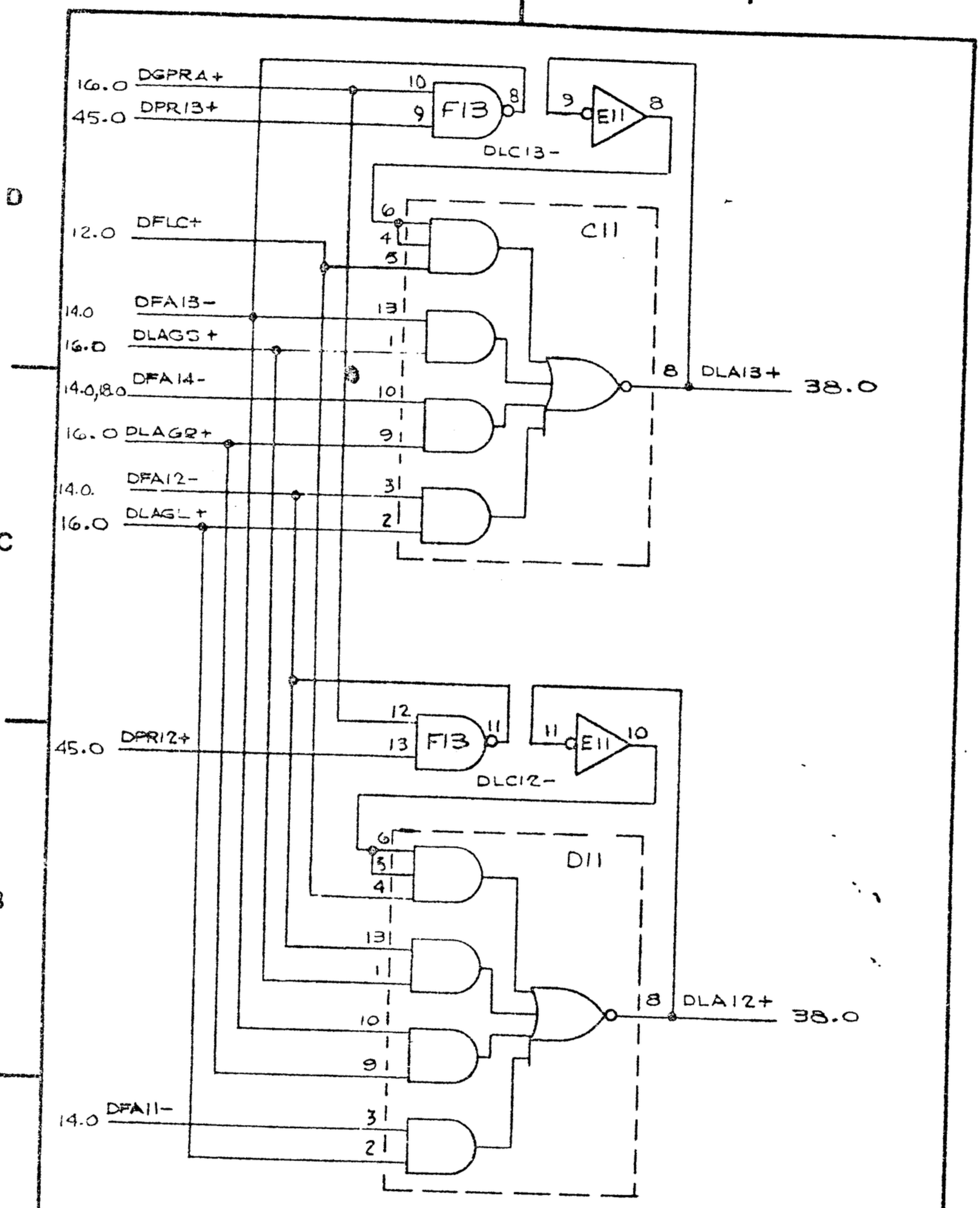

LATCH A 13 AND 12

SCDS IDENT NO.	SIZE	DWG NO	REV
21101	B	91B0378	AT
SCALE		SHEET 19.0	

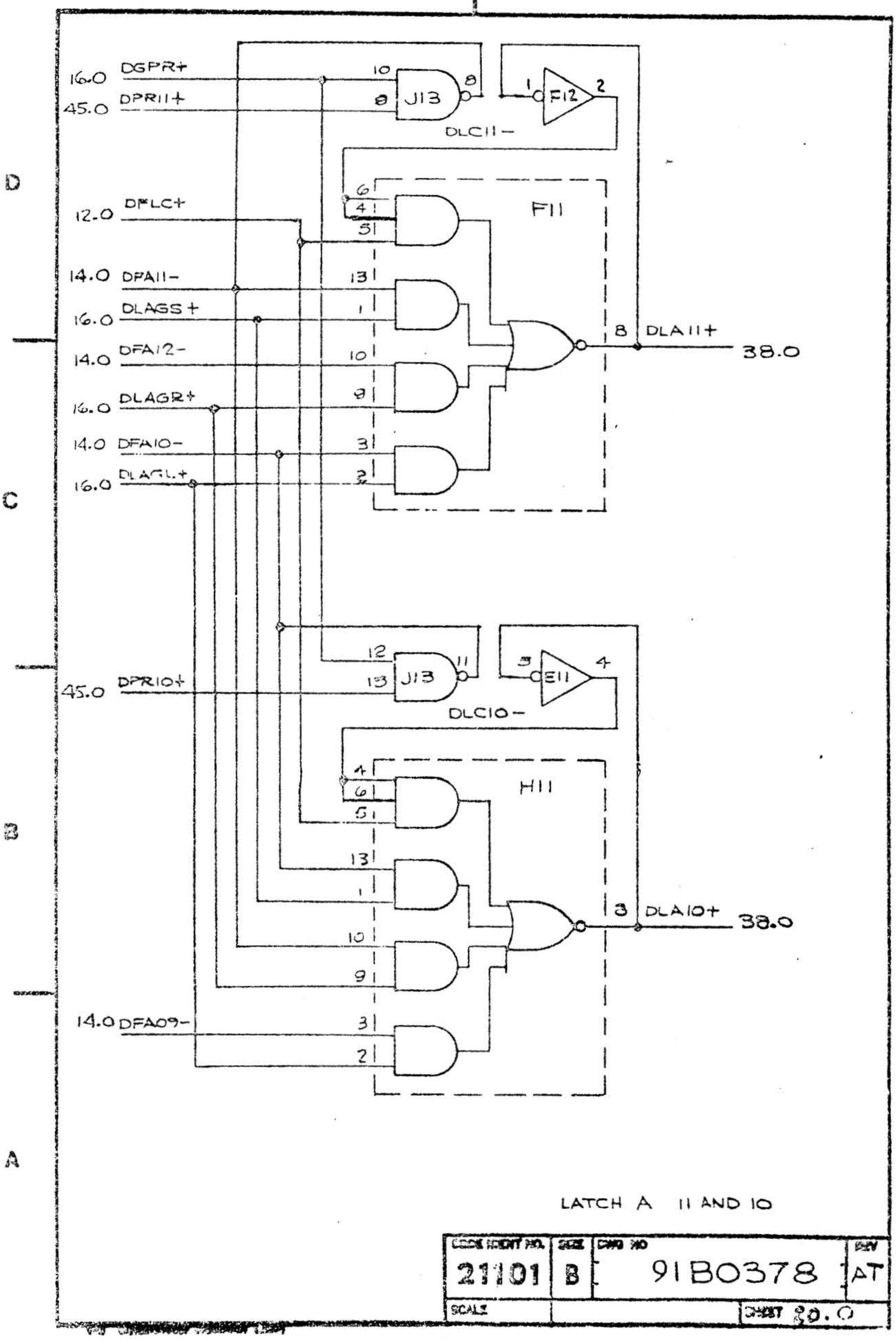
16.0 DGPR+
45.0 DPR11+
J13
F12
DLC11-
F11
12.0 DFLC+
14.0 DFA11-
16.0 DLAGS+
14.0 DFA12-
16.0 DLAGR+
14.0 DFA10-
16.0 DLAGL+
DLA11+
38.0
45.0 DPR10+
J13
E11
DLC10-
H11
14.0 DFA09-
DLA10+
38.0
LATCH A 11 AND 10
21101
B
91B0378
AT
SCALE
SHEET 80.0

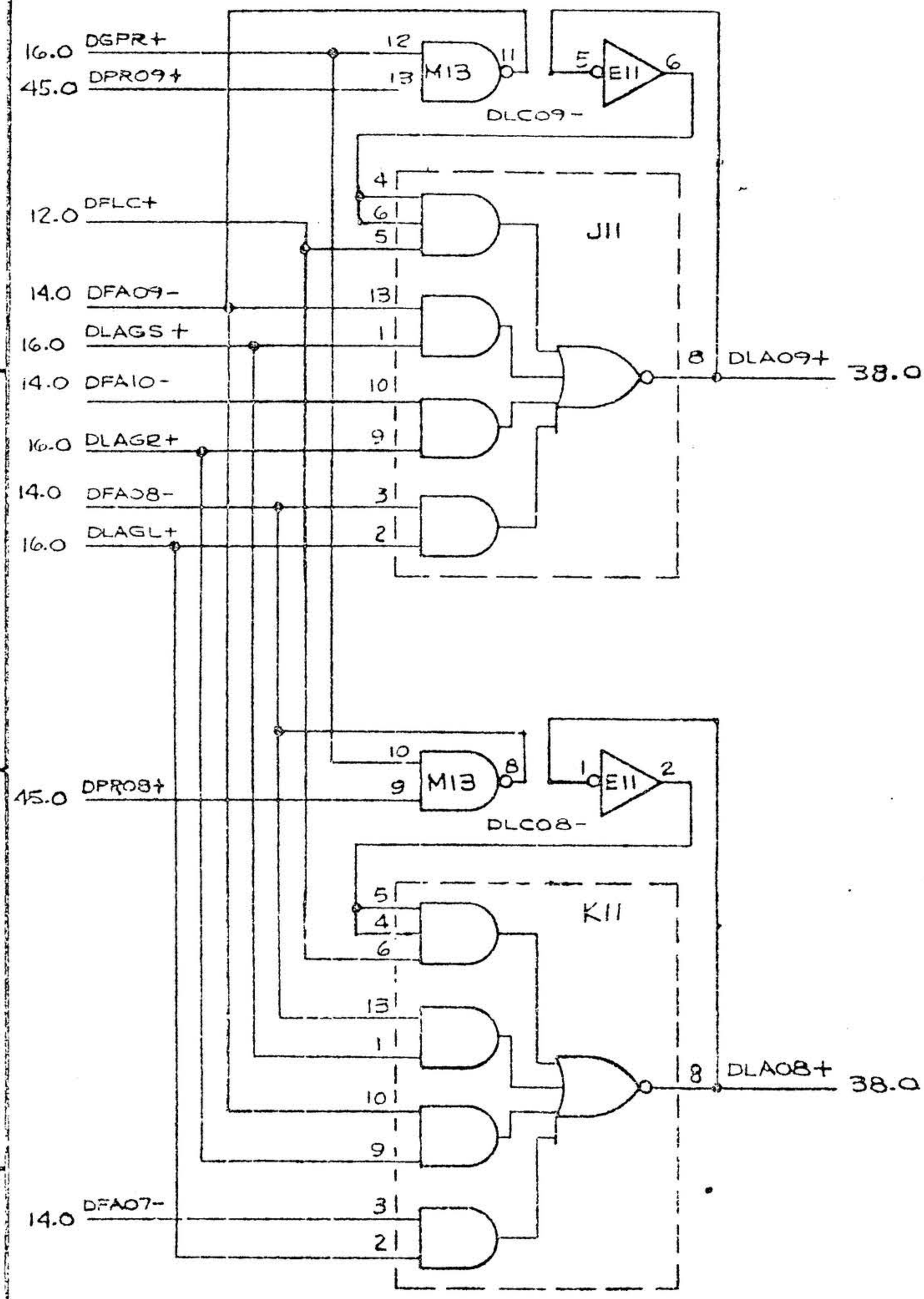

LATCH A 09 AND 08

CODE IDENT NO.	SIZE	DWG NO	REV
21101	B	91B0378	AT
SCALE			SHEET 21.0

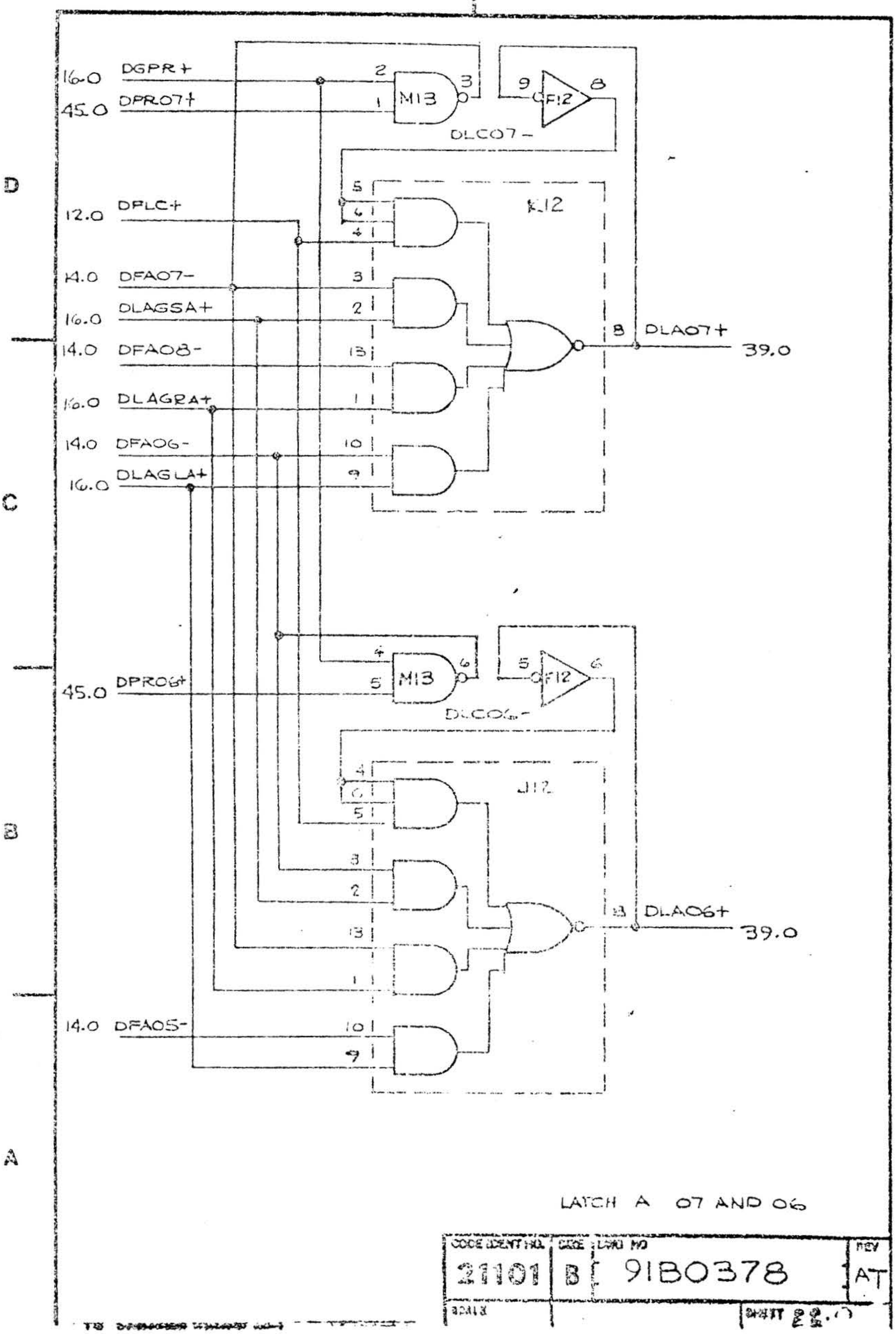

LATCH A 07 AND 06

CODE IDENT NO	SIZE	DWG NO	REV
21101	B	91B0378	AT

SCALE

SHEET 22.0

2 1

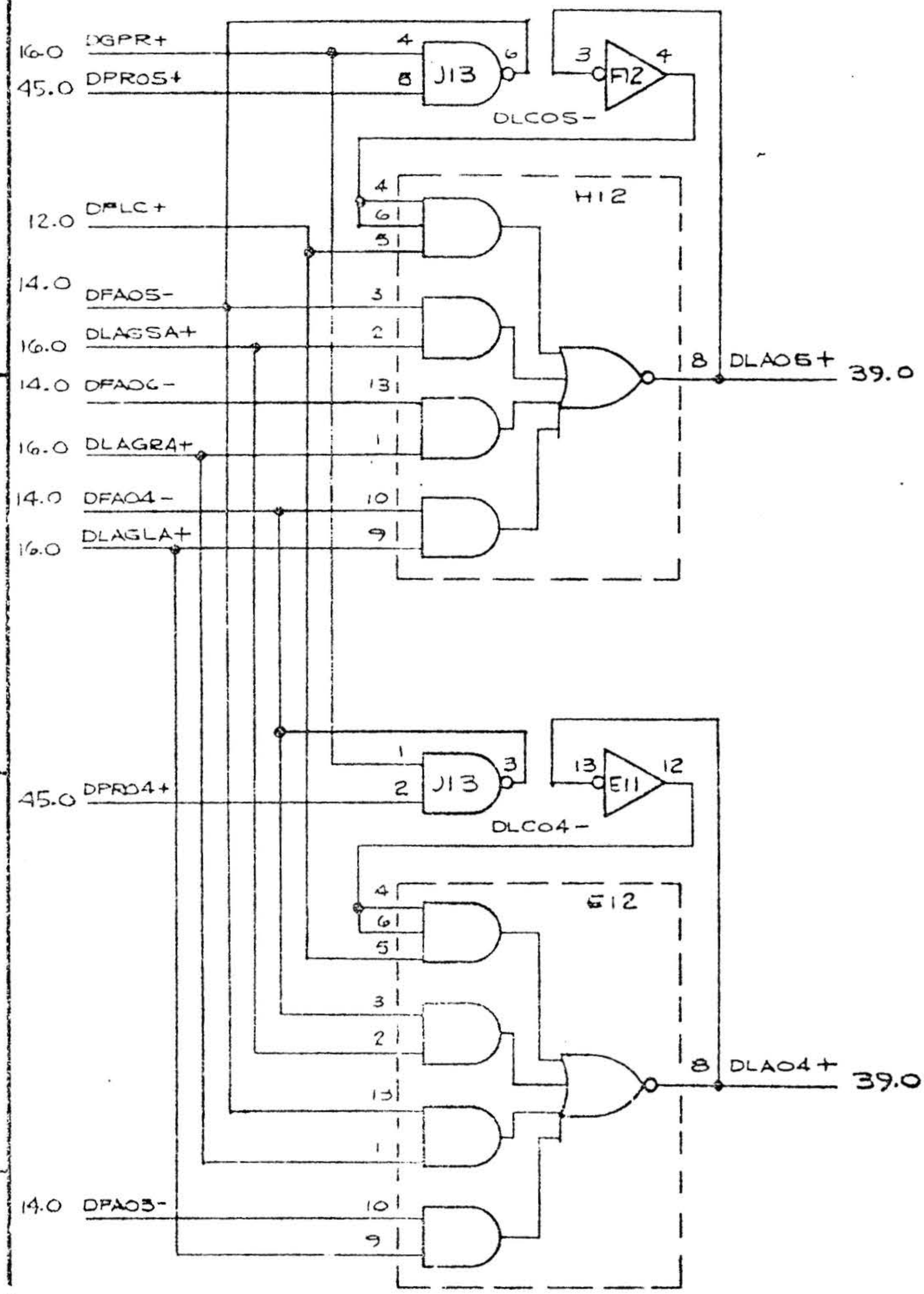

LATCH A 06 AND 04

CODE IDENT NO.	SIZE	DWG NO	REV
21101	B	91B0378	AT
SCALE		SHEET 23.0	

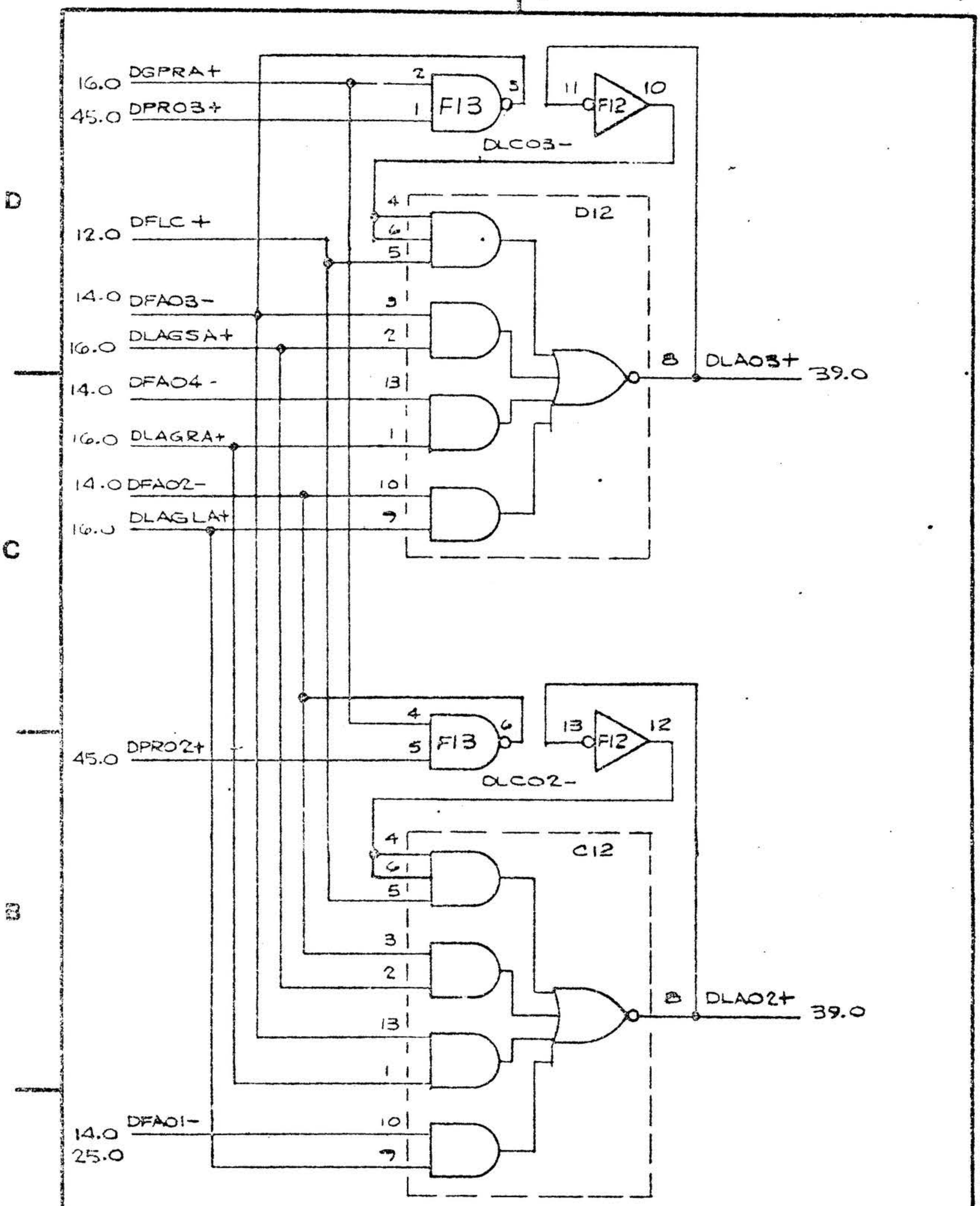
2
1
D
C
B
A
16.0 DGPRA+
45.0 DPRO3+
F13
F12
DLC03-
D12
12.0 DFLC +
14.0 DFAO3-
16.0 DLAGSA+
14.0 DFAO4 -
16.0 DLAGRA+
14.0 DFAO2-
16.0 DLAGLA+
DLA03+
39.0
45.0 DPRO2+
DLC02-
C12
DLA02+
39.0
14.0 DFAO1-
25.0
LATCH A 03 AND 02
CODE IDENT NO. 21101
SIZE B
DWG NO 91B0378
REV AT
SCALE
SHEET 2 OF 10

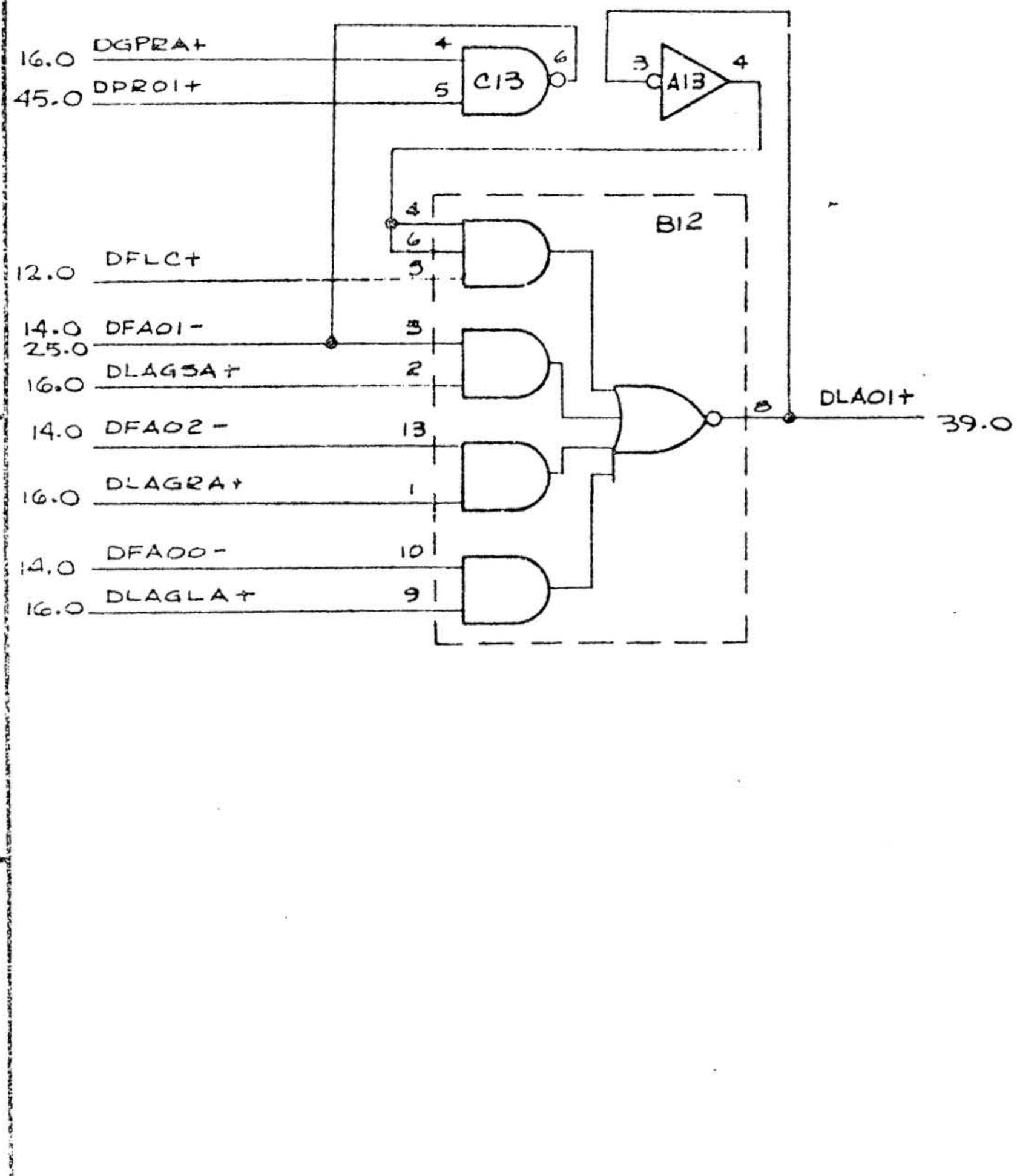

LATCH A 1 AND 0

CODE IDENT NO.	SIZE	DWG NO	REV
21101	B	91B0378	AT
SCALE			SHEET 25.0

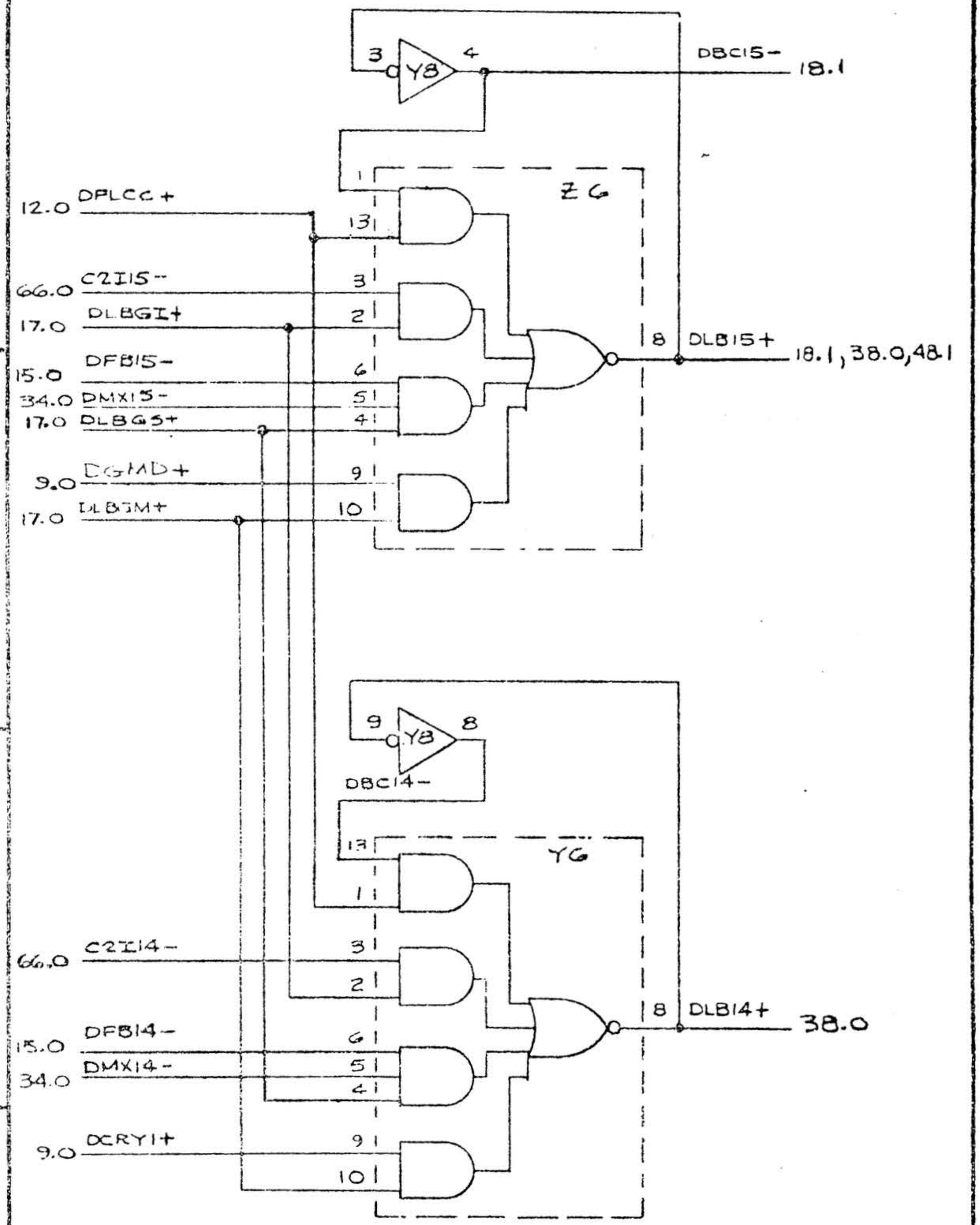
2
1
3
Y8
4
DBC15-
18.1
1
Z6
12.0 DPLCC+
13
66.0 C2I15--
3
17.0 DLBGI+
2
8
DLB15+
18.1,38.0,48.1
15.0 DFB15-
6
34.0 DMX15-
5
17.0 DLBGS+
4
9.0 DGMD+
9
17.0 DLBJM+
10
9
Y8
8
DBC14-
13
Y6
1
66.0 C2I14-
3
2
8
DLB14+
38.0
15.0 DFB14-
6
34.0 DMX14-
5
4
9.0 DCRY1+
9
10
D
C
B
A
LATCH 8 15 AND 14
CODE IDENT NO.
21101
SIZE
B
DWG NO
91B0378
REV
AT
SCALE
SHEET 26.0

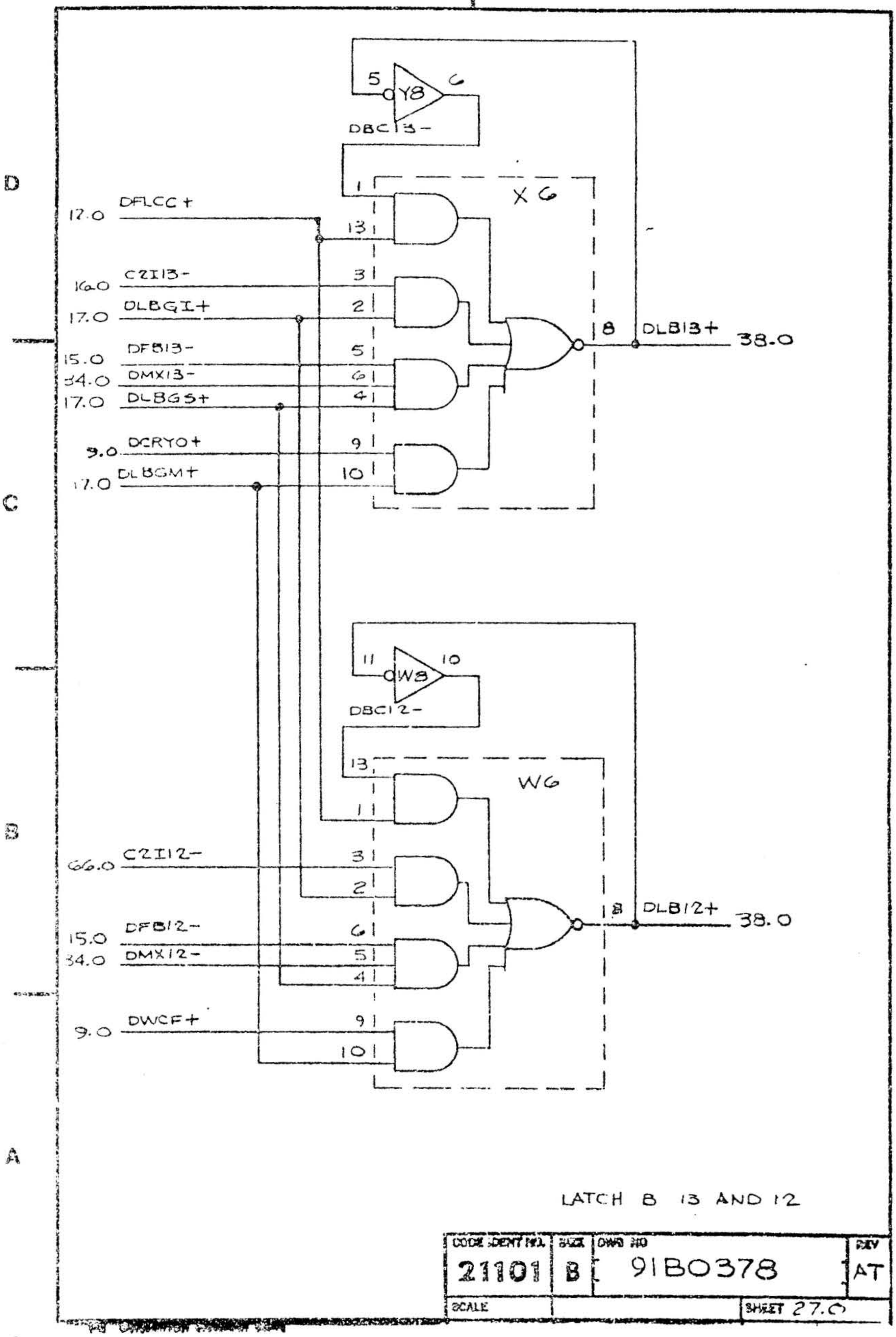

LATCH B 13 AND 12

CODE IDENT NO.	SIZE	DWG NO	REV
21101	B	91B0378	AT
SCALE		SHEET 27.0	

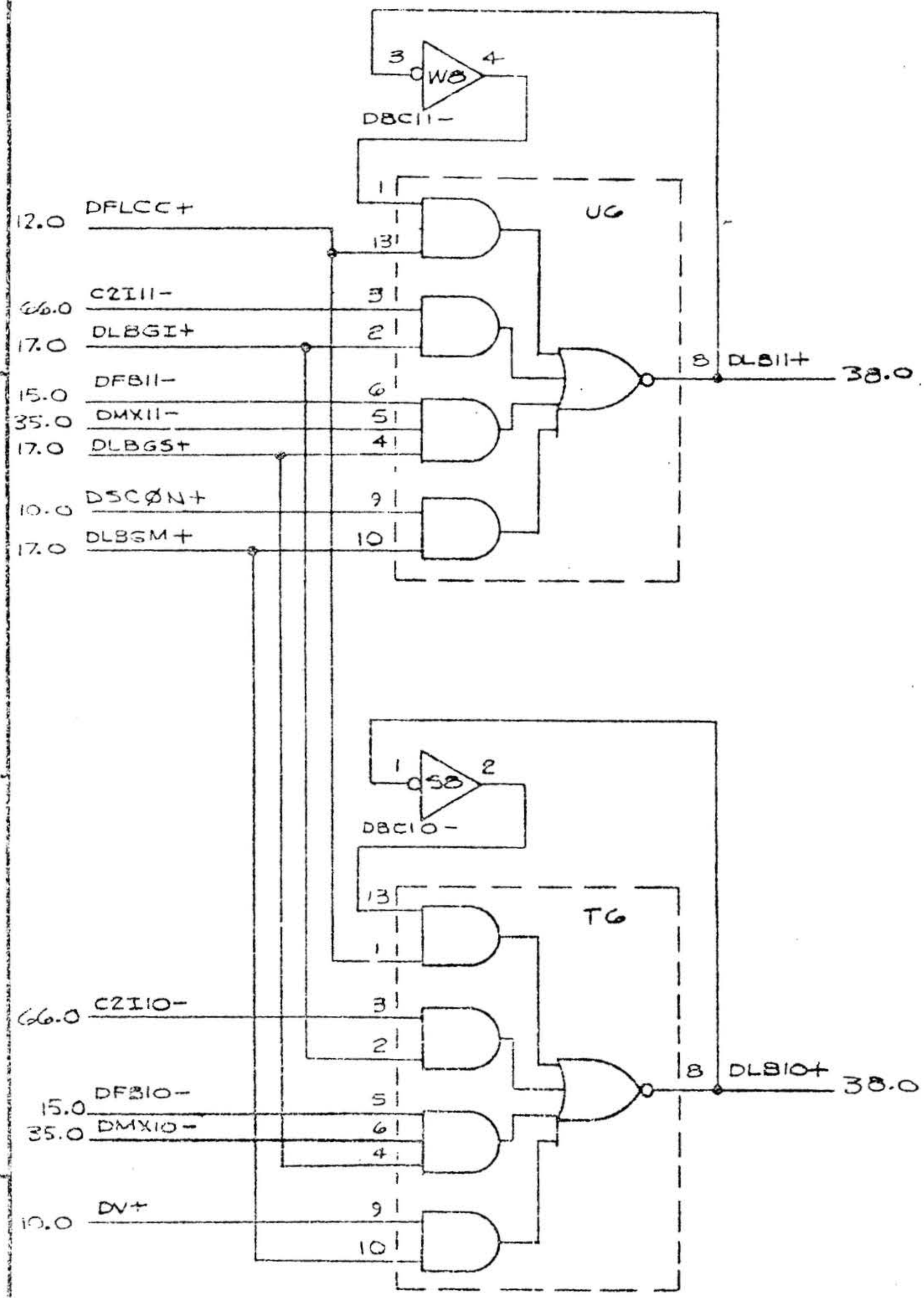

LATCH B 11 AND 10

CODE IDENT NO.	SIZE	DWG NO	REV
21101	B	9180378	AT
SCALE			SHEET 29.0

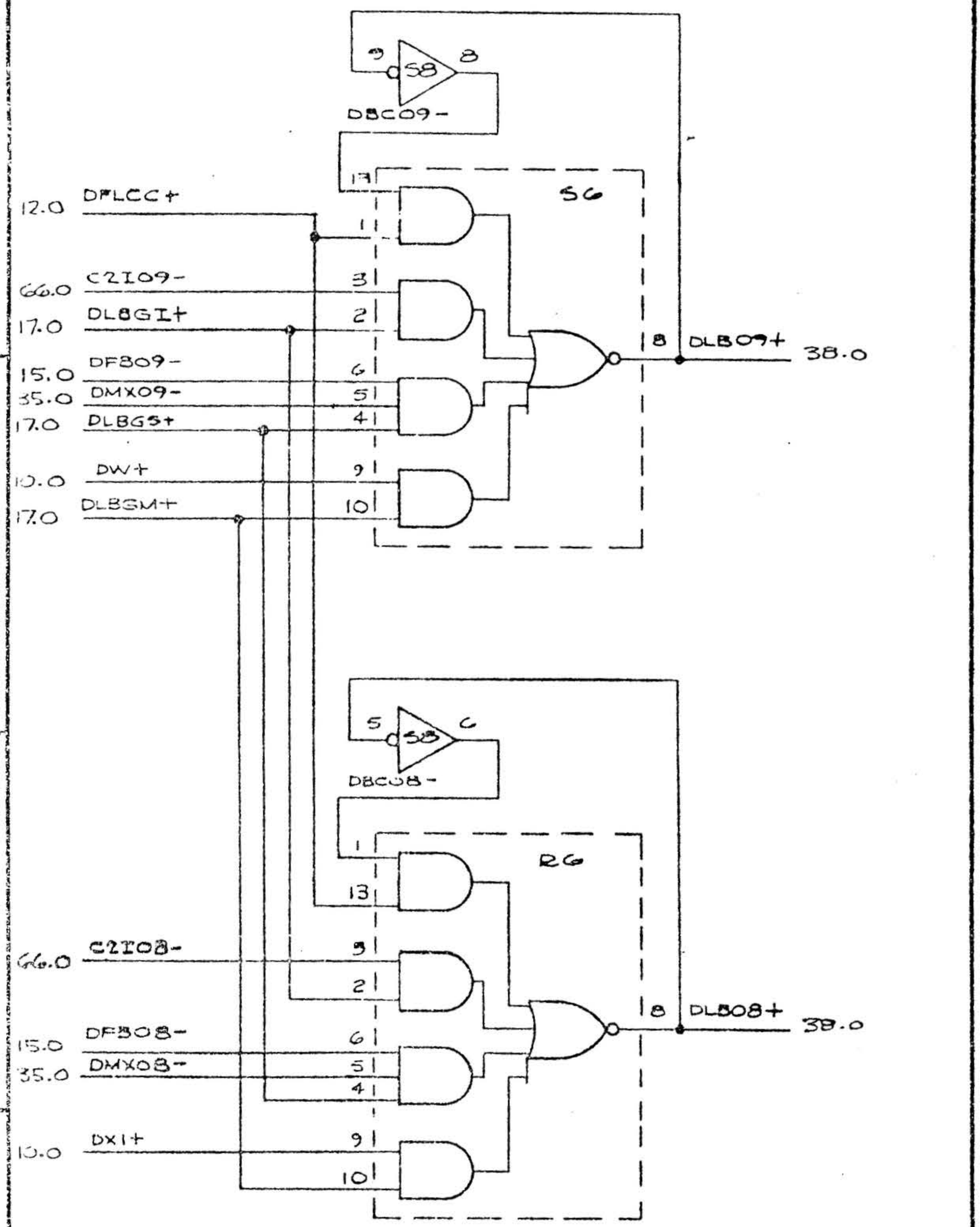

LATCH B 09 AND 08

CODE IDENT NO.	SIZE	DWG NO	REV
21101	B	91B0378	AT
SCALE			SHEET

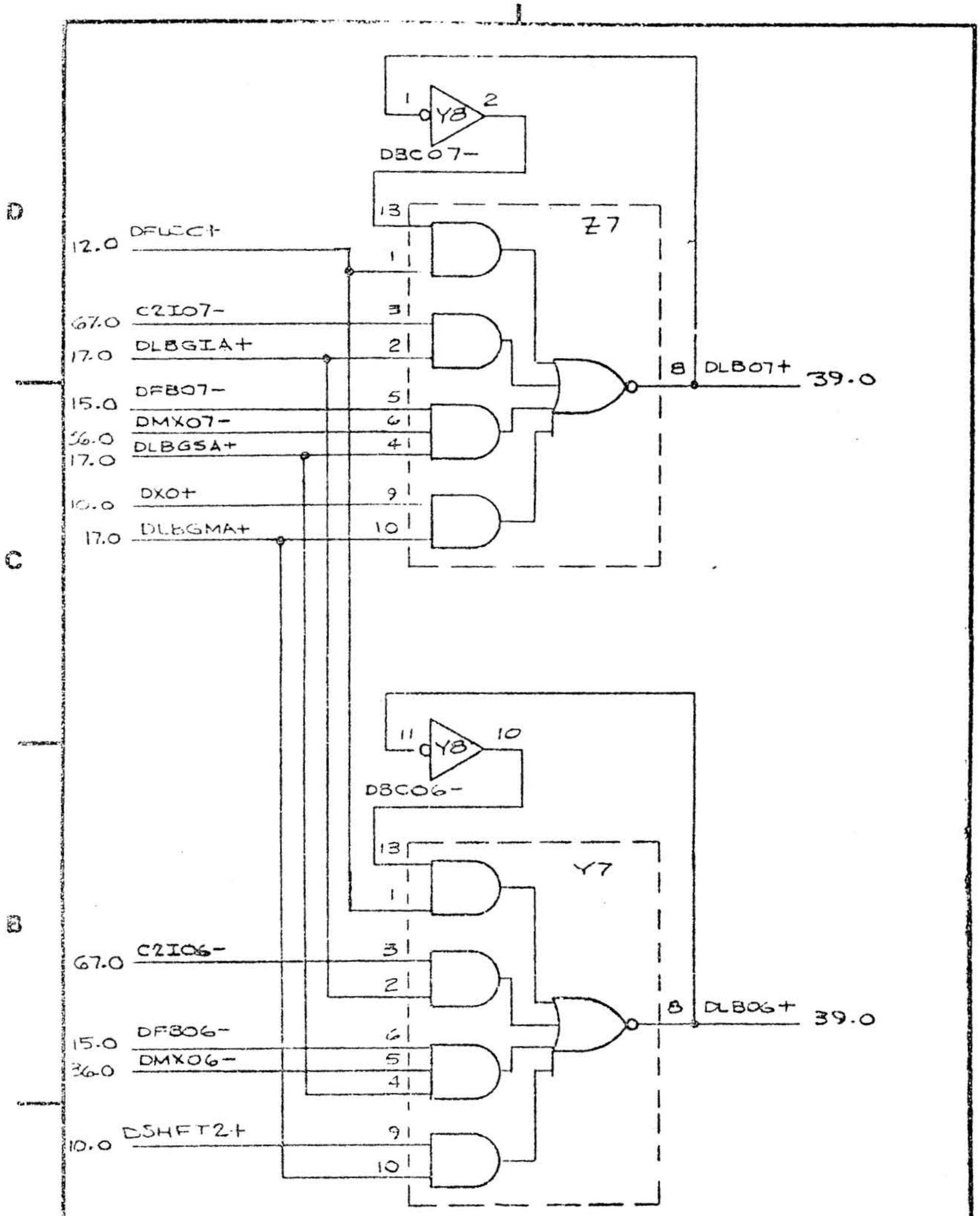
Y8
DBC07-
13
Z7
12.0 DFUCC1-
1
67.0 C2IO7-
3
17.0 DLBGIA+
2
15.0 DFB07-
5
DMX07-
6
56.0
DLBGSA+
4
17.0
10.0 DXO+
9
17.0 DLBGMA+
10
8 DLB07+ 39.0
Y8
11
10
DBC06-
13
Y7
1
67.0 C2IO6-
3
2
15.0 DFB06-
6
DMX06-
5
36.0
4
10.0 DSHFT2+
9
10
8 DLB06+ 39.0
LATCH B 07 AND 06
21101
B
91B0378
AT
SCALE
SHEET 30.0

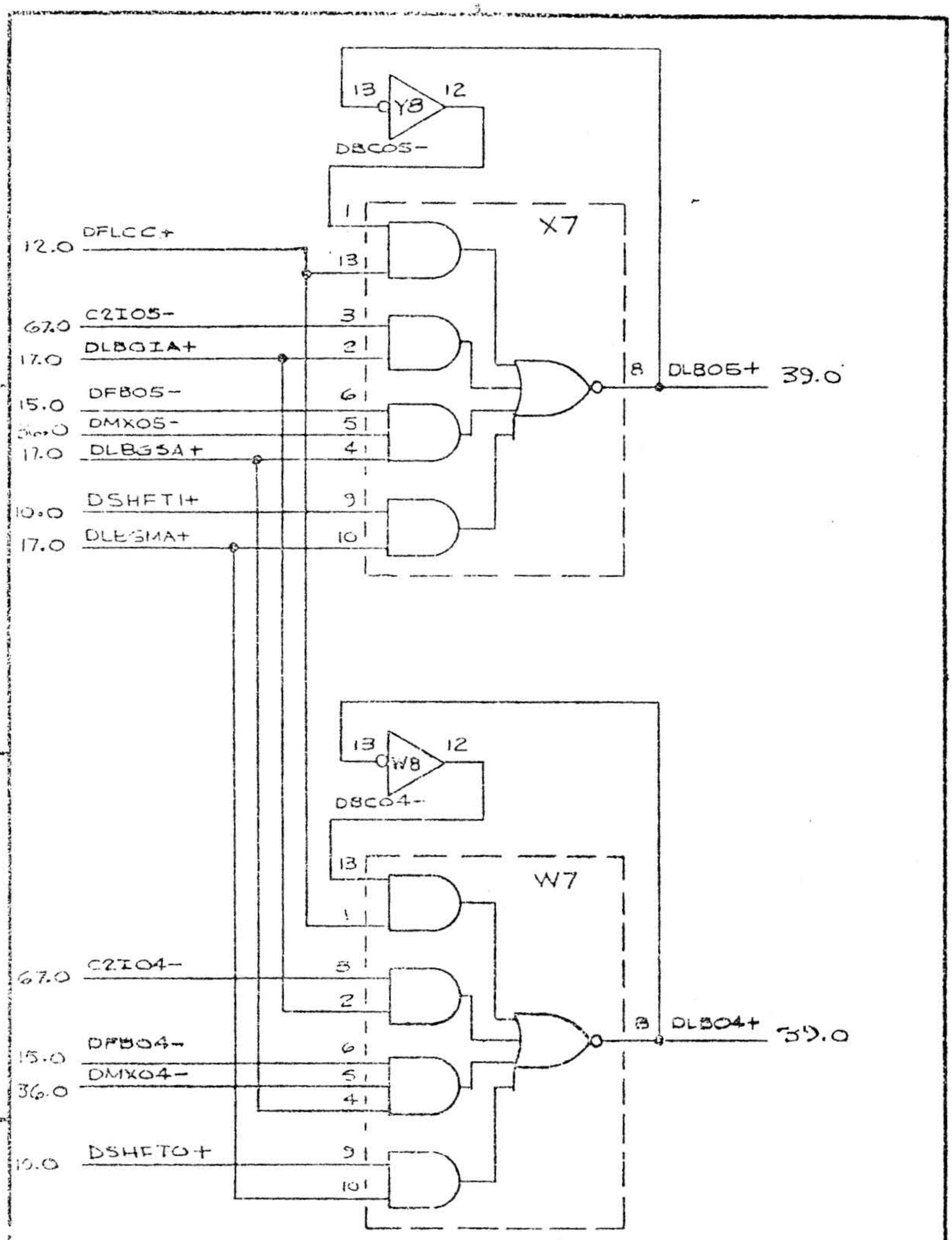

LATCH B 05 AND 04

CODE IDENT NO.	SIZE	DWG NO	REV
21101	B	91B0378	AT
SCALE			SHEET 9 1.0

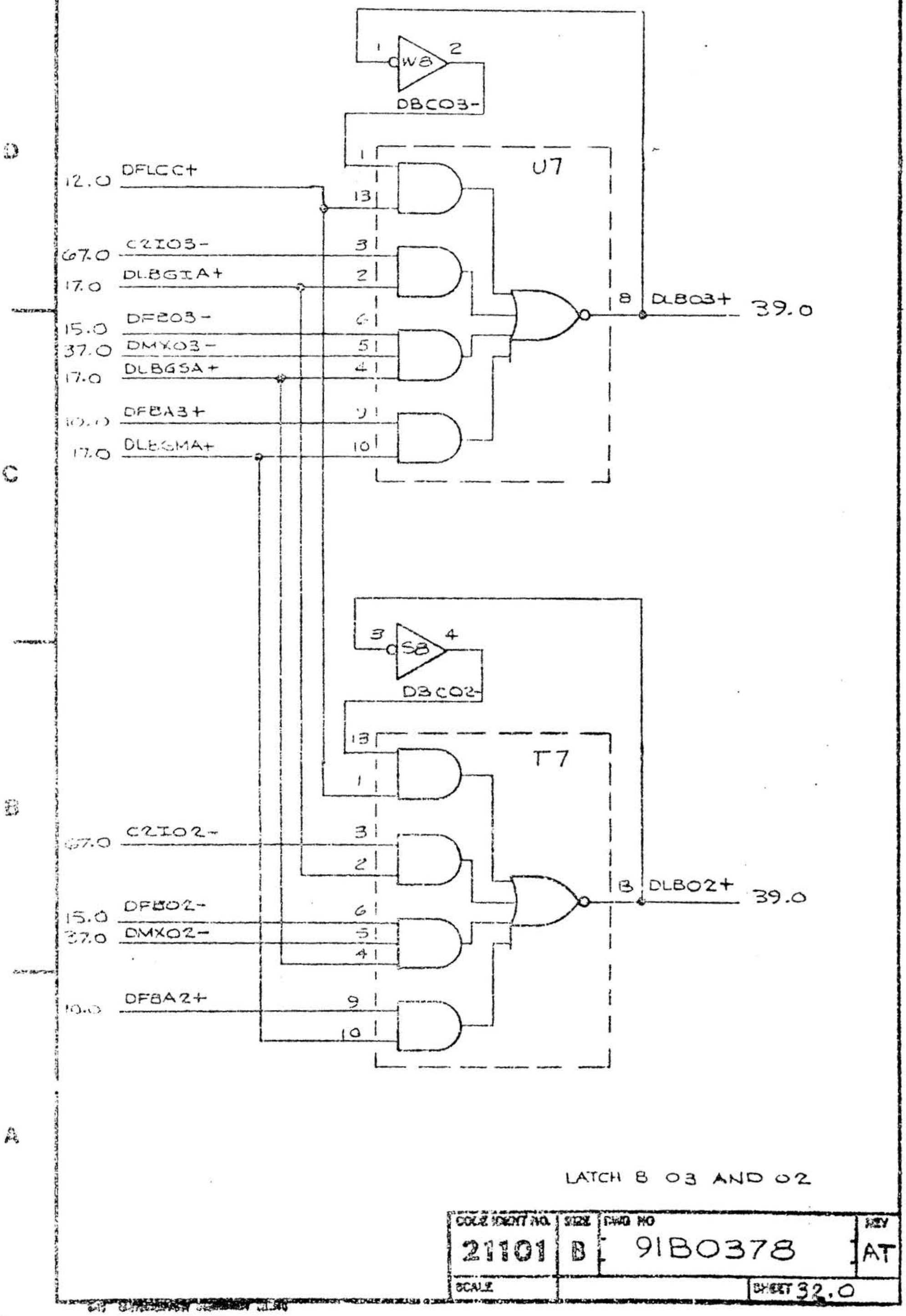

LATCH B 03 AND 02

CODE IDENT NO.	SIZE	DWG NO	REV
21101	B	91B0378	AT
SCALE			SHEET 32.0

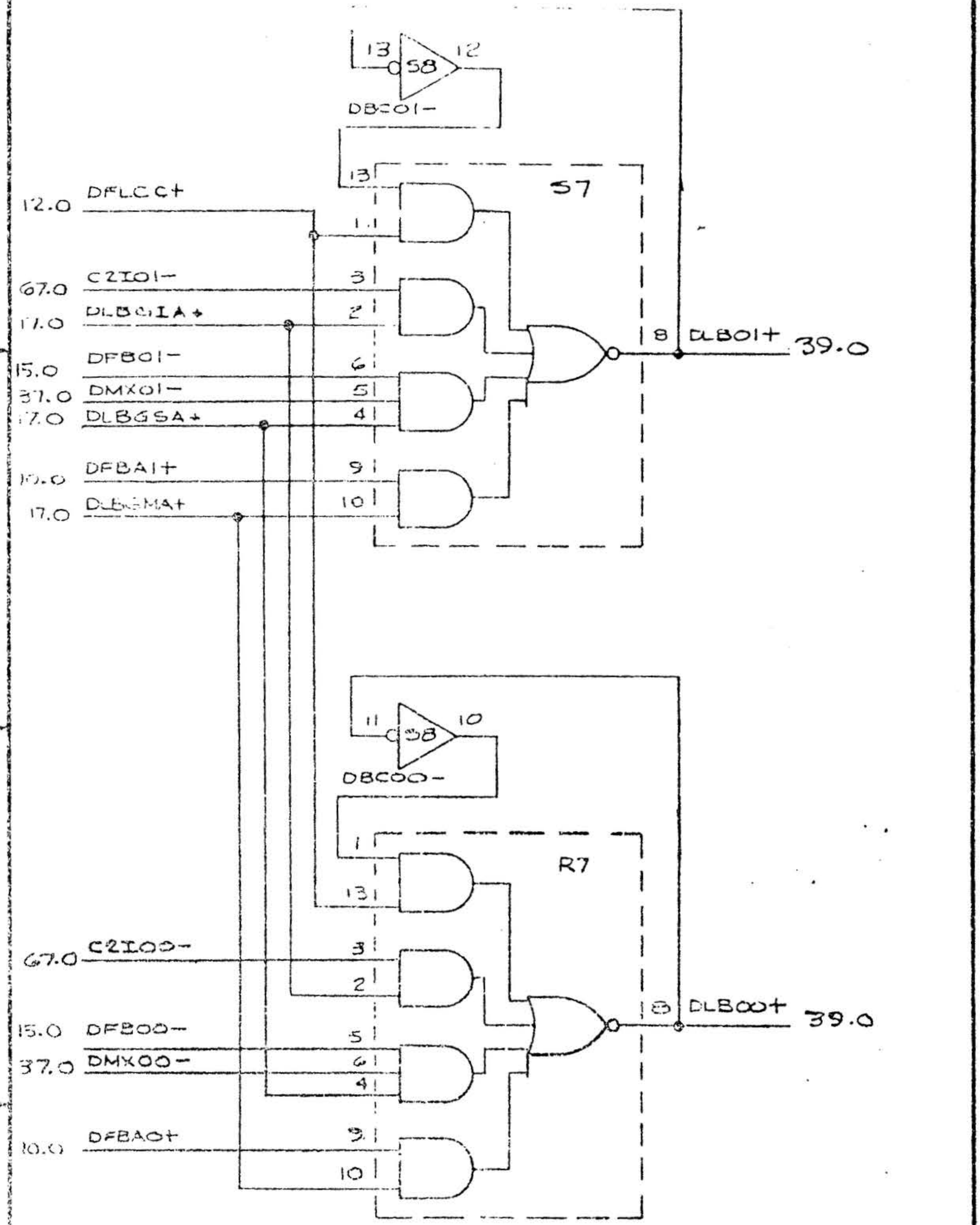
13
58
12
DBC01-
13
57
12.0 DFLCC+
1
67.0 C2IO1-
3
17.0 DLBGIA+
2
15.0 DFB01-
6
37.0 DMX01-
5
17.0 DLBGSA+
4
10.0 DFBA1+
9
17.0 DLBGMA+
10
8 DLB01+ 39.0
11
58
10
DBC00-
1
R7
13
67.0 C2I00-
3
2
15.0 DFB00-
5
37.0 DMX00-
6
4
10.0 DFBA0+
9
10
8 DLB00+ 39.0
LATCH B 01 AND 00
21101
B
91B0378
AT
SCALE
SHEET 33.0

17.0 DLBMX−

DFBA0A+
10.0
DFBA1A+
10.0
DFBA2A+
10.0

42.0 DØRI5+
101.0 MILI5+
108.0 IØRI5+
44.0 DCKI5+
96.0
42.0 DØRO7A+
42.0 DØRI5A+
42.0 DØRO7+

42.0 DØRI4+
101.0 MILI4+
108.0 IØRI4+
44.0 DCKI4+
96.0
42.0 DØRO6+

42.0 DØRI3+
101.0 MILI3+
108.0 IØRI3+
44.0 DCKI3+
96.0
42.0 DØRO5+

42.0 DØRI2+
101.0 MILI2+
108.0 IØRI2+
44.0 DCKI2+
96.0
42.0 DØRO4+

Z11 VII XII WII

C B A D0 D1 D2 D3 D4 D5 D6 D7 W Y S

DMX15− 26.0
DMX14− 26.0
DMX13− 27.0
DMX12− 27.0

△4 Z11, V11, X11, W11 ARE 1 OF 8 MUX

8 MUX 15-12

CODE IDENT NO.	SIZE	DWG NO	REV
21101	B	91B0378	AT
SCALE			SHEET 34.0

17.0 DLBMX—
10.0 DFBA3A+
10.0 DFBA1A+
10.0 DFBA2A+

42.0 DØK11+
102.0 MIL11+
108.0 IØR11+
51.0 DSGN1+
42.0 DØR07A+
42.0 DØR15A+
42.0 DØR03+

U11 → DMX11— 28.0

42.0 DØK10+
102.0 MIL10+
108.0 IØR10+
51.0 DSGN+
42.0 DØR02+

T11 → DMX10— 28.0

42.0 DØR09+
102.0 MIL09+
108.0 IØR09+
51.0 DEQ+
42.0 DØR01+

S11 → DMX09— 29.0

42.0 DØR08+
102.0 MIL08+
108.0 IØR08+
48.0 DØVF+
42.0 DØR00+

R11 → DMX08— 29.0

△5 R11, S11, T11, U11 ARE 1 OF 8 MUX

8 MUX 11-08

CONSTRUCTION NO.	SIZE	DWG NO	REV
21101	B	91B0378	AT
SCALE		SHEET 1	

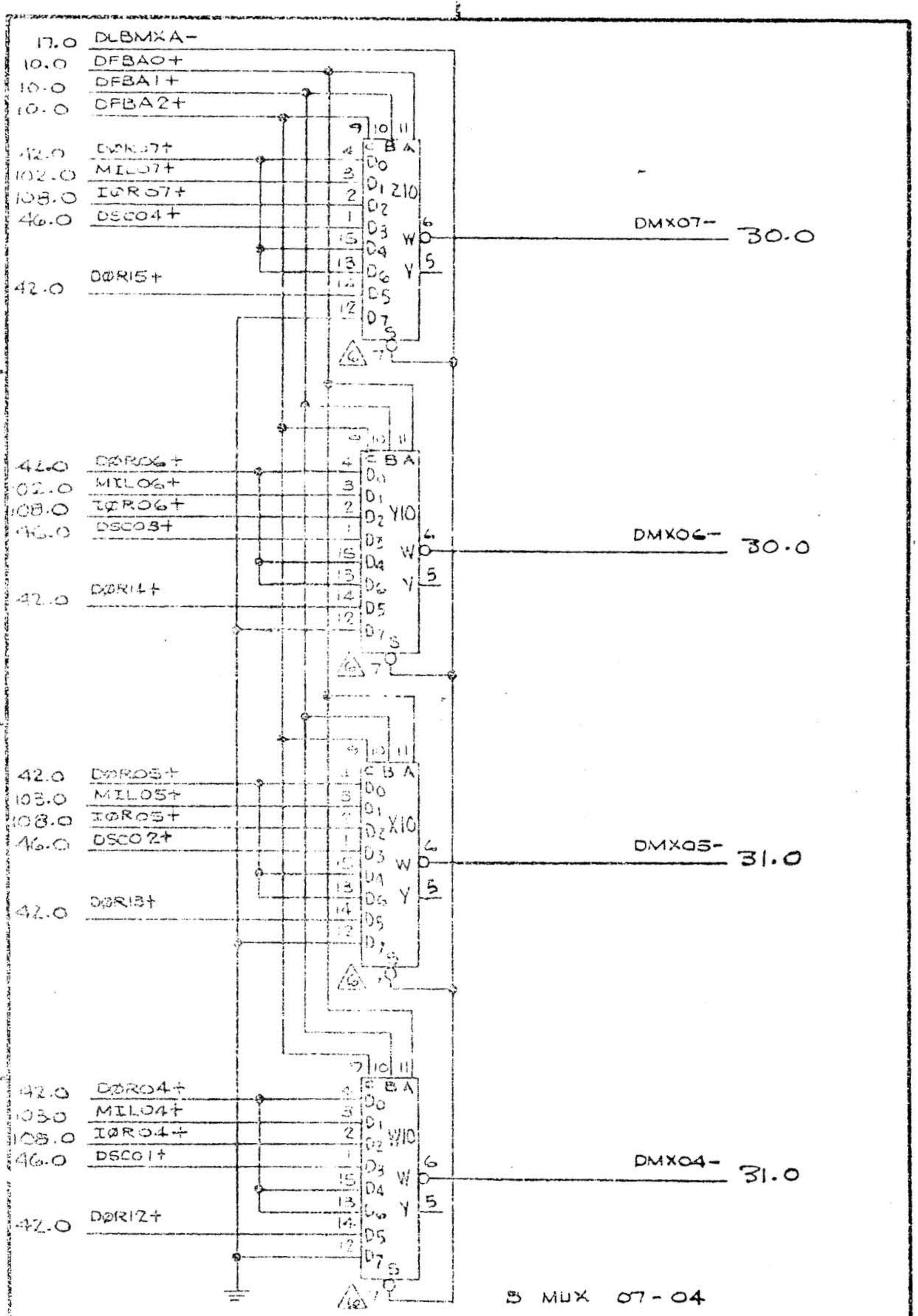
17.0 DLBMXA-
10.0 DFBA0+
10.0 DFBA1+
10.0 DFBA2+
42.0 DØRO7+
102.0 MILO7+
108.0 IØRO7+
46.0 DSCO4+
42.0 DØRI5+
DMX07- 30.0
42.0 DØRO6+
102.0 MILO6+
108.0 IØRO6+
46.0 DSCO3+
42.0 DØRI4+
DMX06- 30.0
42.0 DØRO5+
103.0 MILO5+
108.0 IØRO5+
46.0 DSCO2+
42.0 DØRI3+
DMX05- 31.0
42.0 DØRO4+
103.0 MILO4+
108.0 IØRO4+
46.0 DSCO1+
42.0 DØRI2+
DMX04- 31.0
W10, X10, Y10, Z10, ARE
1 OF 8 MUX
B MUX 07-04
21101
B
91B0378
AT
SCALE
SHEET 36.0

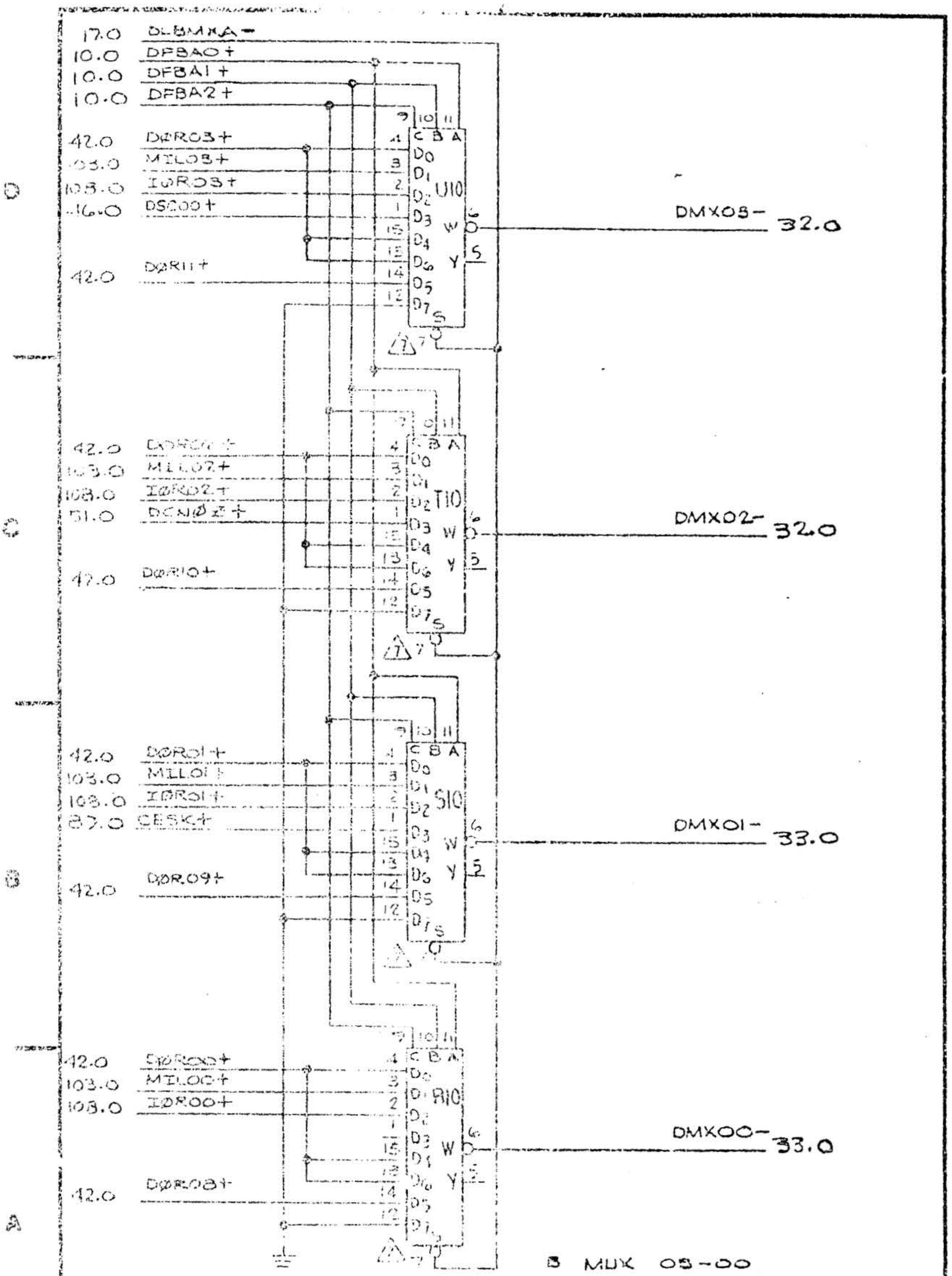
17.0 DLBMXA-
10.0 DFBA0+
10.0 DFBA1+
10.0 DFBA2+
42.0 DØRO3+
103.0 MILO3+
108.0 IØRO3+
51.0 DCNØ3+
16.0 DSC003+
42.0 DØRI1+
U10
DMX03- 32.0
42.0 DØRO2+
103.0 MILO2+
108.0 IØRO2+
51.0 DCNØ2+
42.0 DØRI0+
T10
DMX02- 32.0
42.0 DØRO1+
103.0 MILO1+
108.0 IØRO1+
87.0 CESK+
42.0 DØR09+
S10
DMX01- 33.0
42.0 DØRO0+
103.0 MILO0+
108.0 IØRO0+
42.0 DØRI08+
R10
DMX00- 33.0
B MUX 03-00
RIO, S10, T10, U10 ARE 1 OF 8 MUX
CODE IDENT NO 21101
SIZE B
DWG NO 91B0378
REV AT
SCALE
SHEET 37.0

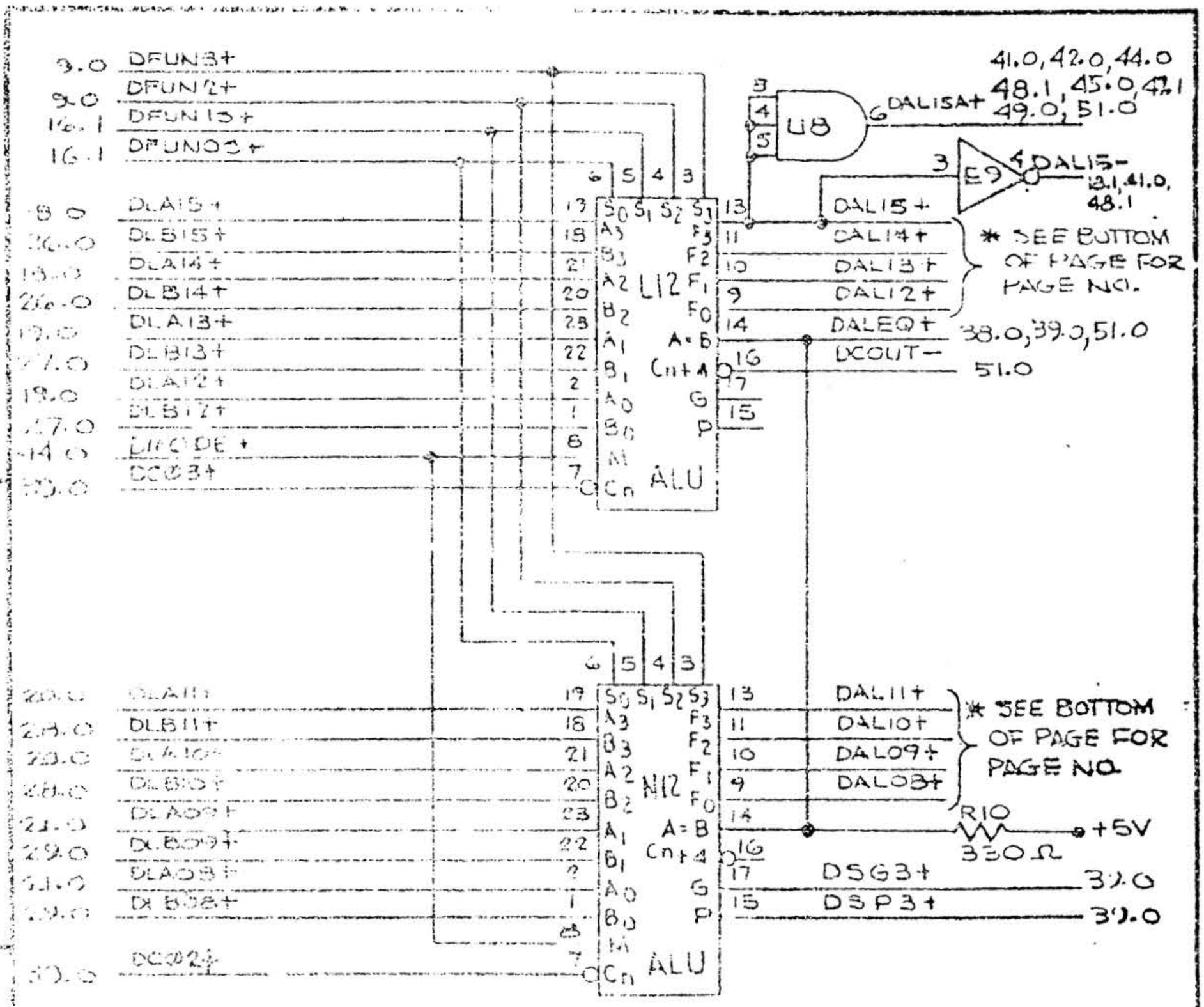

* DALI5+ 14.0,15.0,18.1,42.0,96.0,99.0,100.0,107.0

* DALI4+ 14.0,15.0,18.1,42.0,44.0,45.0,47.0,96.0,99.0,100.0,107.0

* DALI3+ 14.0,15.0,42.0,44.0,45.0,47.0,96.0,99.0,100.0,107.0

* DALI2+ 14.0,15.0,42.0,44.0,45.0,47.0,96.0,99.0,100.0,107.0

* DALI1+
* DALI0+
* DALO9+
* DALO8+
} 14.0,15.0,42.0,45.0,47.0,99.0,100.0,106.0

21101	B	91B0378	AT
		SHEET 33.0	

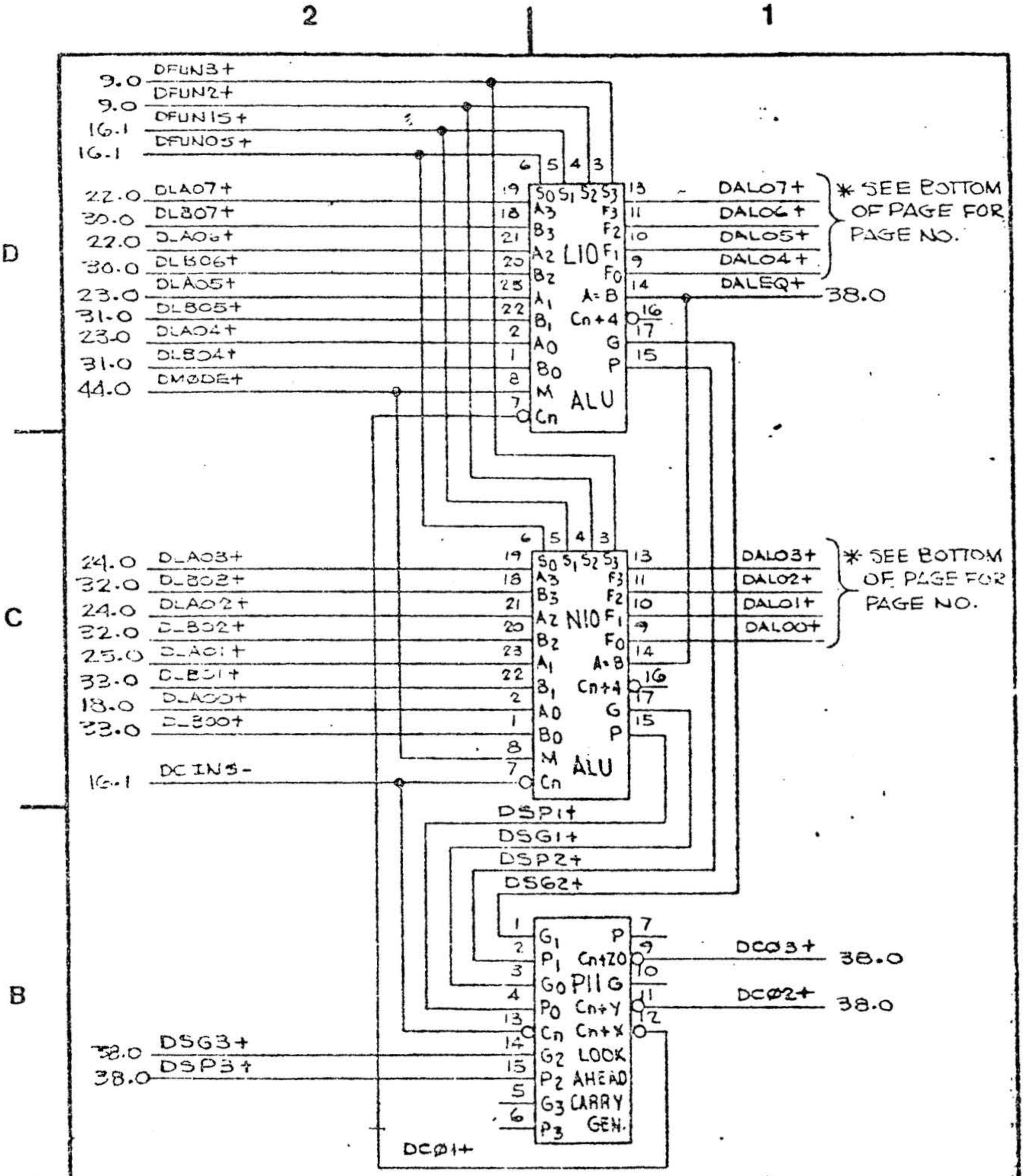
2
1
D
C
B
A
9.0 DFUN3+
9.0 DFUN2+
16.1 DFUN1S+
16.1 DFUN0S+
22.0 DLA07+
30.0 DLB07+
22.0 DLA06+
30.0 DLB06+
23.0 DLA05+
31.0 DLB05+
23.0 DLA04+
31.0 DLB04+
44.0 DMODE+
LIO
ALU
DALO7+
DALO6+
DALO5+
DALO4+
DALEQ+
38.0
* SEE BOTTOM OF PAGE FOR PAGE NO.
24.0 DLA03+
32.0 DLB02+
24.0 DLA02+
32.0 DLB02+
25.0 DLA01+
33.0 DLB01+
18.0 DLA00+
33.0 DLB00+
16.1 DCINS-
NIO
ALU
DALO3+
DALO2+
DALO1+
DALO0+
DSP1+
DSG1+
DSP2+
DSG2+
DCØ3+
DCØ2+
38.0
38.0
52.0 DSG3+
38.0 DSP3+
DCØ1+
* DALO7+
* DALO6+
* DALO5+
* DALO4+
14.0,15.0,42.0,45.0,46.0,47.0,98.0,100.0,105.0
* DALO3+
* DALO2+
* DALO1+
* DALO0+
14.0,15.0,42.0,45.0,46.0,47.0,98.0,100.0,104.0
CODE IDENT NO. 21101
SIZE B
DWG NO 91B0378
REV AT
SCALE
SHEET 39.0

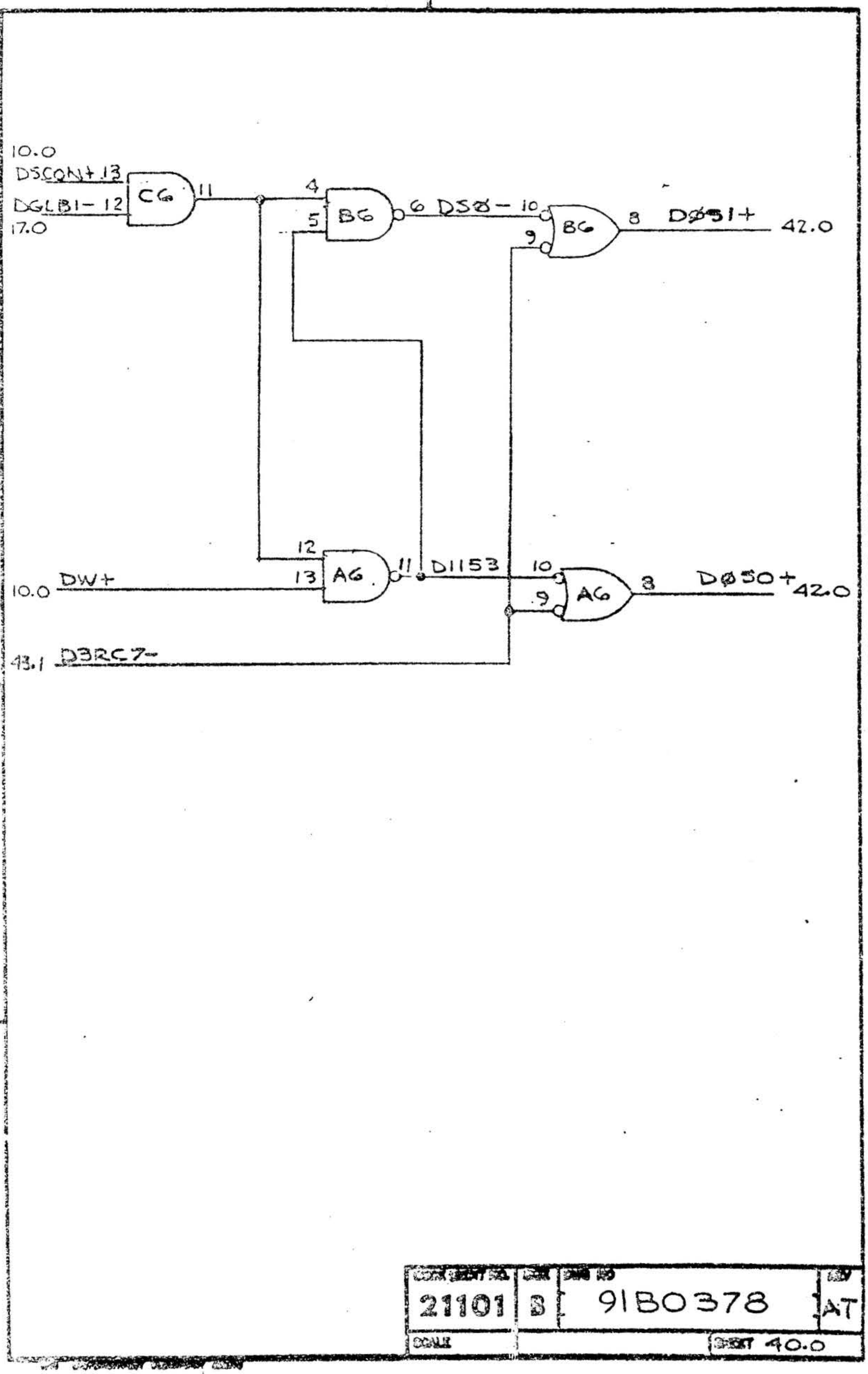

21101	B	91B0378	AT
SCALE		SHEET 40.0	

92.0 MHC-

6 BIT LATCH

14.0 DFA00-
15.0 DFA15-
67.0 C2I06-
44.0 DCK13+
96.0
67.0 C2I07-
44.0 DCK12+
96.0
90.0 MRQSCA-

6 DFA00D+ 41.0
9 DFA15D+ 41.0
4 C2I06D+ 16.1
11 MLL17-, 96.0
2 C2I07D+ 16.1
13 MLL16- 96.0

42.0 DØR00+
41.0 DFA00D+
42.0 DØR15+

9 DSR15+ 42.0

10.0 DX1+
10.0 DX0+

DUAL 4 LINE TO 1 LINE MUX

41.0 DFA15D+
38.0 DAL15-

7 DSL00+ 42.0

18.1 V05D02+

44.0 DEKSB+
43.0 DMFC+

H7

DSB+ 52.0
DSB- 71.0

52.0 V05D04+

38.0 DAL15+
10.0 DSCON+

H8

DSCON-

C10

DKQS+

DQS+ 52.0

DSCON- 43.0,89.0

90.0 KKG1+
17.0 DGLBI-
38.0 DAL15A+
10.0 DW+

L8

K9

42.0 DØR01+

DDQS- 12.0

SHIFT CONTROL

21101	B	91B0378	AT
		SHEET 41.0	

41.0 DSR15+
40.0 DØS1+
40.0 DØS0+
38.0 DAL15A+
38.0 DAL14+
38.0 DAL13+
38.0 DAL12+
43.0 DXØR—
+5V
NB-4
38.0 DAL11+
38.0 DAL10+
38.0 DAL09+
38.0 DAL08+
39.0 DAL07+
39.0 DAL06+
39.0 DAL05+
39.0 DAL04+
39.0 DAL03+
39.0 DAL02+
39.0 DAL01+
39.0 DAL00+
41.0 DSL00+

W9, P9, Y9, S9 4-BIT SHIFT REG.

DØR15+ 18.2 34.0, 36.0, 41.0
U8 (13, 1, 2 → 12)
DØR15A+ 34.0, 35.0
DØR14+ 34.0, 36.0
DØR13+ 34.0, 36.0
DØR12+ 34.0, 36.0
DØR11+ 35.0, 37.0
DØR10+ 35.0, 37.0
DØR09+ 35.0, 37.0
DØR08+ 35.0, 37.0
U8 (9, 10, 11 → 8)
DØR07A+ 34.0, 35.0
DØR07+ 34.0, 36.0
DØR06+ 34.0, 36.0
DØR05+ 34.0, 36.0
DØR04+ 34.0, 36.0
DØR03+ 35.0, 37.0
DØR02+ 35.0, 37.0
DØR01+ 35.0, 37.0, 41.0
DØR00+ 18.2 35.0, 37.0 41.0

Ø REG 15-00

21101	B	9180378	AT
SCALE			SHEET 42.0

10.0 DX1+
99.0 MLL15-
17.0 DGLBI-
41.0 DSCØN-
P8
D JUMP+
J4
14

A8
DUAL 2TO4 DECODER
DRC1- 45.0
DRC2- 46.0
DRC3- 43.1
DRC4- 43.1
9.0 DGRC1+
9.0 DGRC0+
DRC5-
B8
DRC5+ 46.0
DRC6- 44.0
DRC7- 43.1

89.0 KKC1+
L8
DKØR- 42.0
W8
DKSCR- 44.0, 46.0, 96.0

97.0 MCDFC-
Z8
DMFC+ 18.1, 41.0, 48.0, 48.1, 49.0

9.0 DGRC2+
H6
DGRC2-
B7
DKPRA-
K8
DKPR+
J6
DKPR- 45.0

97.0 MCDHC+
92.0 MQC+
V05D02+
R11 270Ω +5V
N16
R44 120Ω

18.1
14.0 DFA00-
F7
DBAD- 72.0
DBAD+ 94.0

9.0 DGLA1+
H7

REGISTER CONTROL/DATA LOOP CLOCKS

21101	B	91B0378	AT
SCALE		SHEET 43.	

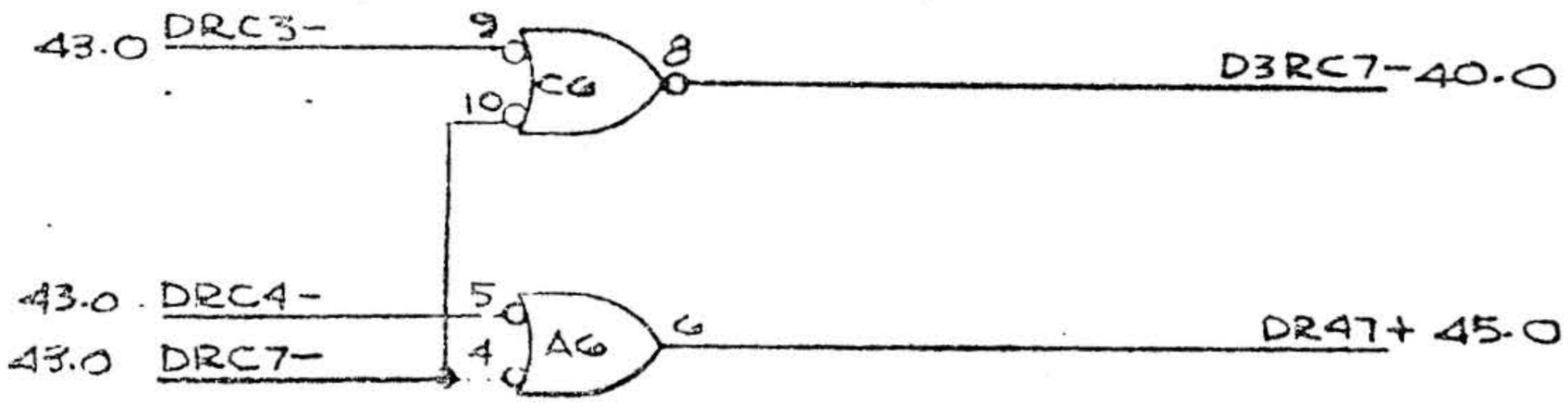

21101	B	91B0378	AT
SCALE			SHEET 43.1

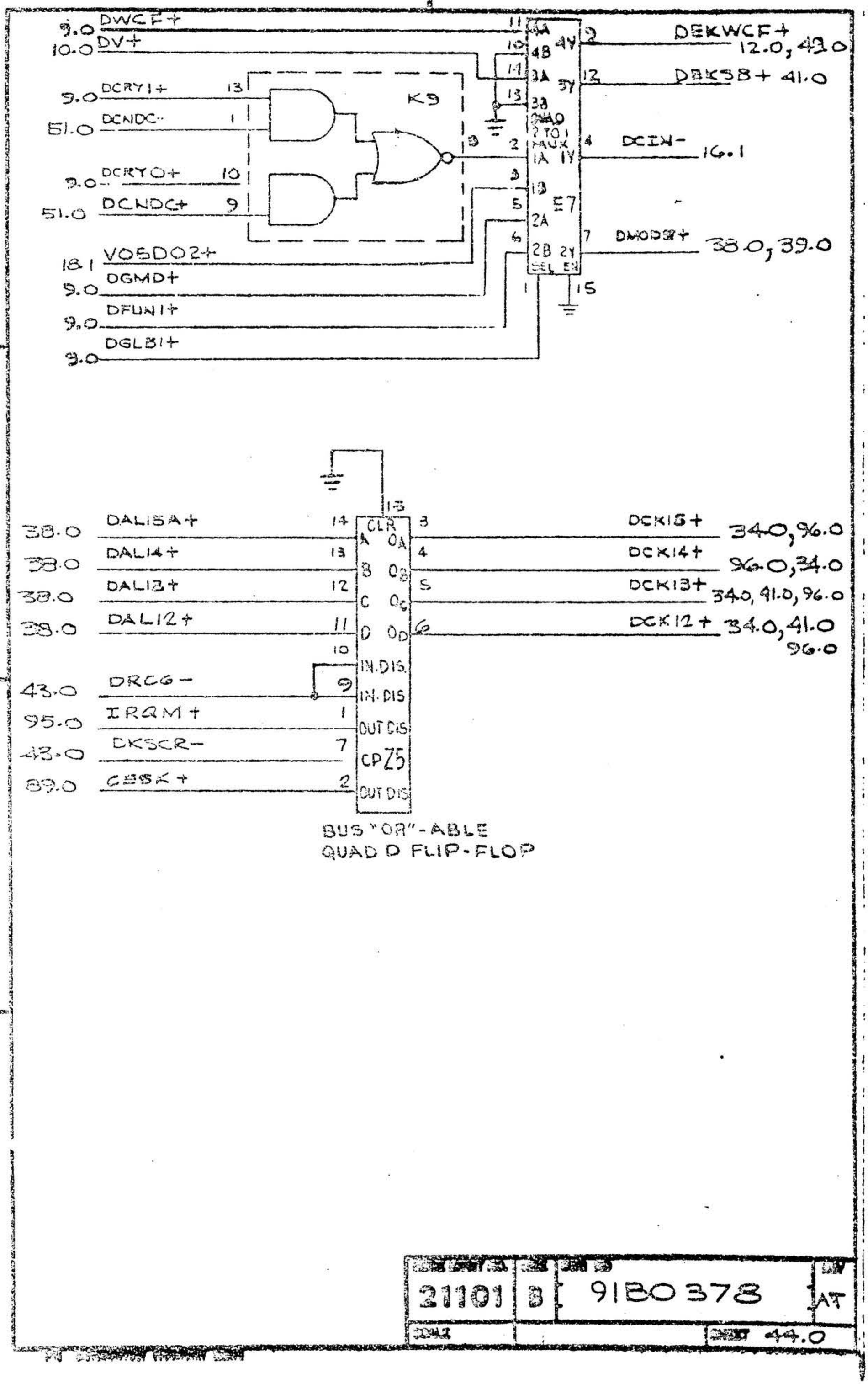

21101	B	9180378	AT
			44.0

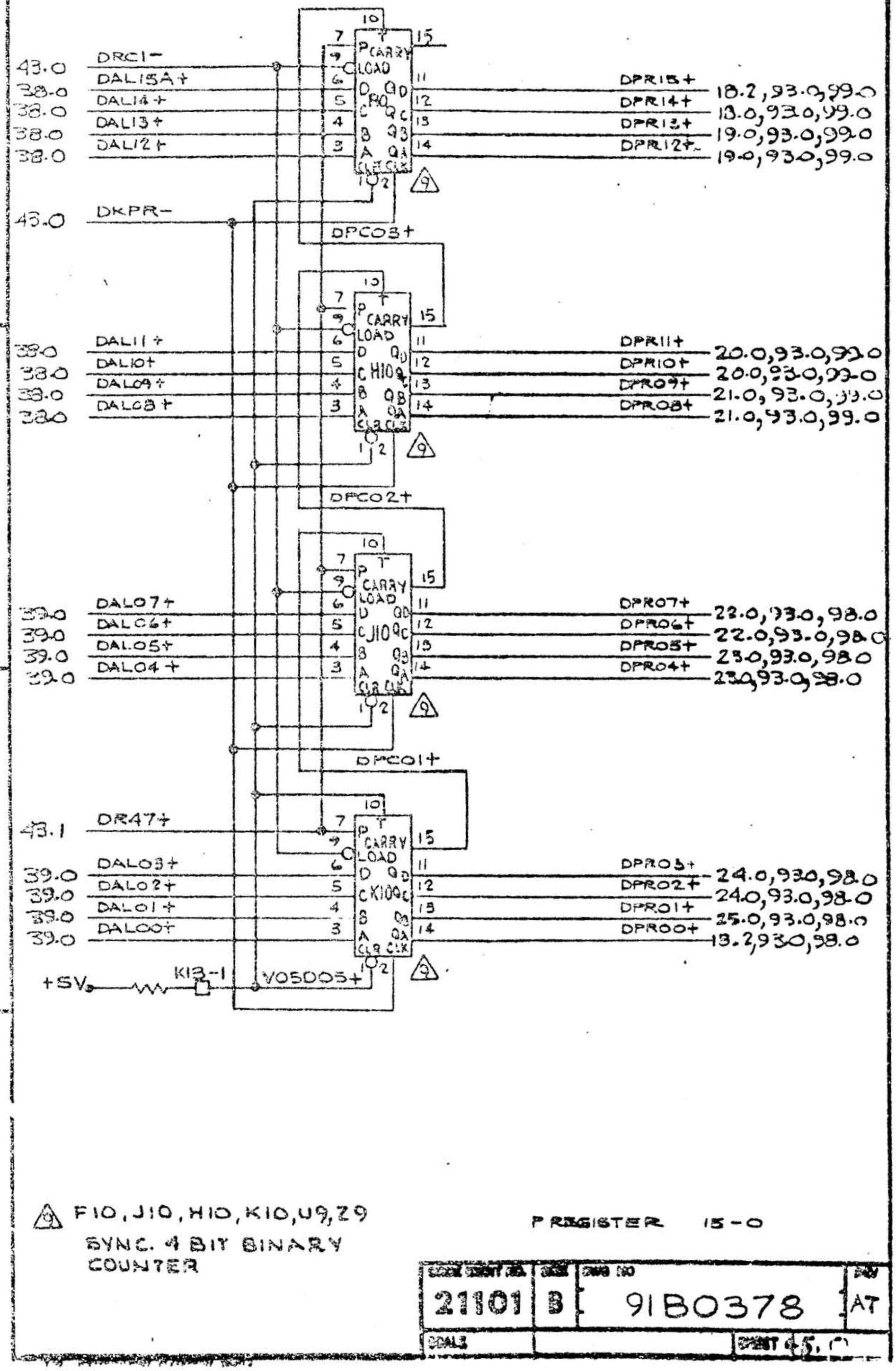
2
1
D
C
B
A
43.0 DRC1−
38.0 DAL15A+
38.0 DAL14+
38.0 DAL13+
38.0 DAL12+
38.0
43.0 DKPR−
DPCO3+
38.0 DAL11+
38.0 DAL10+
38.0 DAL09+
38.0 DAL08+
38.0
DPCO2+
39.0 DAL07+
39.0 DAL06+
39.0 DAL05+
39.0 DAL04+
39.0
DPCO1+
43.1 DR47+
39.0 DAL03+
39.0 DAL02+
39.0 DAL01+
39.0 DAL00+
39.0
+5V
K13-1
V05D05+
DPR15+ 18.2,93.0,99.0
DPR14+ 18.0,93.0,99.0
DPR13+ 19.0,93.0,99.0
DPR12+ 19.0,93.0,99.0
DPR11+ 20.0,93.0,99.0
DPR10+ 20.0,93.0,99.0
DPR09+ 21.0,93.0,99.0
DPR08+ 21.0,93.0,99.0
DPR07+ 23.0,93.0,98.0
DPR06+ 22.0,93.0,98.0
DPR05+ 23.0,93.0,98.0
DPR04+ 23.0,93.0,98.0
DPR05+ 24.0,93.0,98.0
DPR02+ 24.0,93.0,98.0
DPR01+ 25.0,93.0,98.0
DPR00+ 13.2,93.0,98.0
F10, J10, H10, K10, U9, Z9
SYNC. 4 BIT BINARY COUNTER
P REGISTER 15-0
21101
B
91B0378
AT

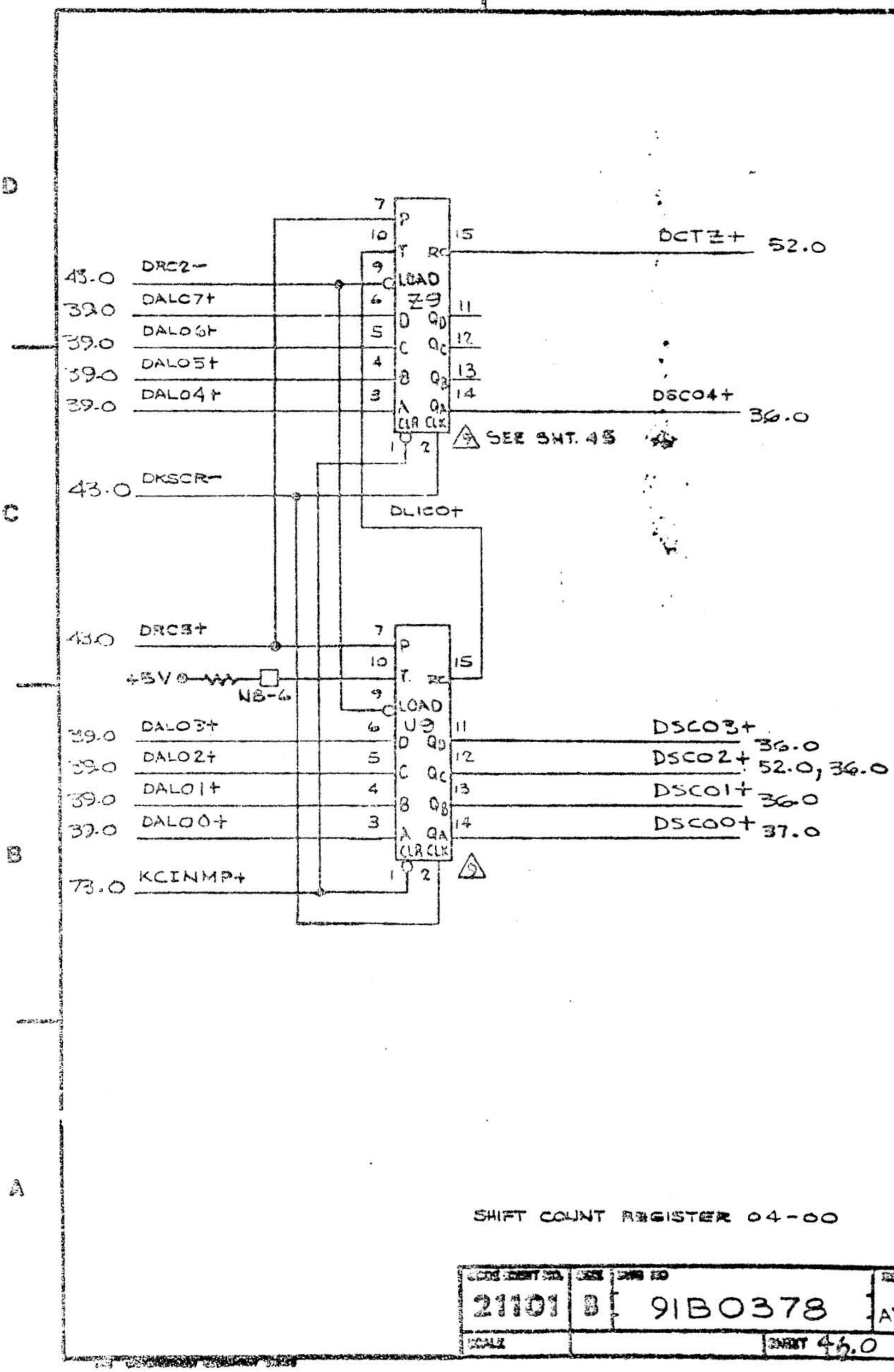

SHIFT COUNT REGISTER 04-00

21101	B	91B0378	AT
SCALE		SHEET 46.0	

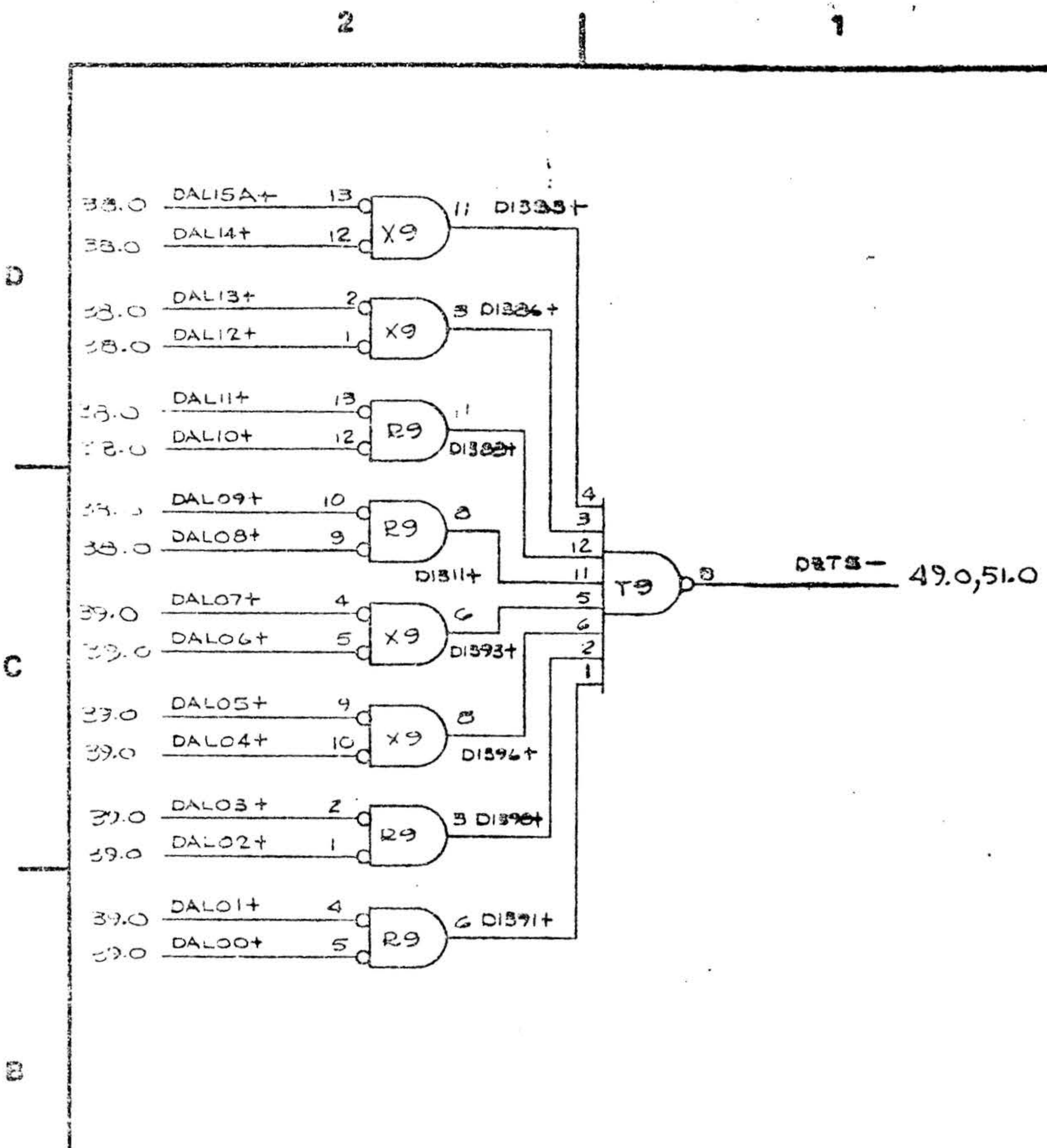
2
1
D
C
B
A
38.0
DAL15A+
13
DAL14+
12
X9
11
DI3355+
38.0
DAL13+
2
DAL12+
1
X9
3
DI3364+
38.0
DAL11+
13
DAL10+
12
R9
DI3321+
38.0
DAL09+
10
DAL08+
9
R9
8
DI3311+
39.0
DAL07+
4
DAL06+
5
X9
6
DI3393+
39.0
DAL05+
9
DAL04+
10
X9
8
DI3964+
39.0
DAL03+
2
DAL02+
1
R9
3
DI3961+
39.0
DAL01+
4
DAL00+
5
R9
6
DI3971+
5
6
2
1
T9
8
DATS-
49.0,51.0
TEST ZERO
21101
B
91B0378
AT

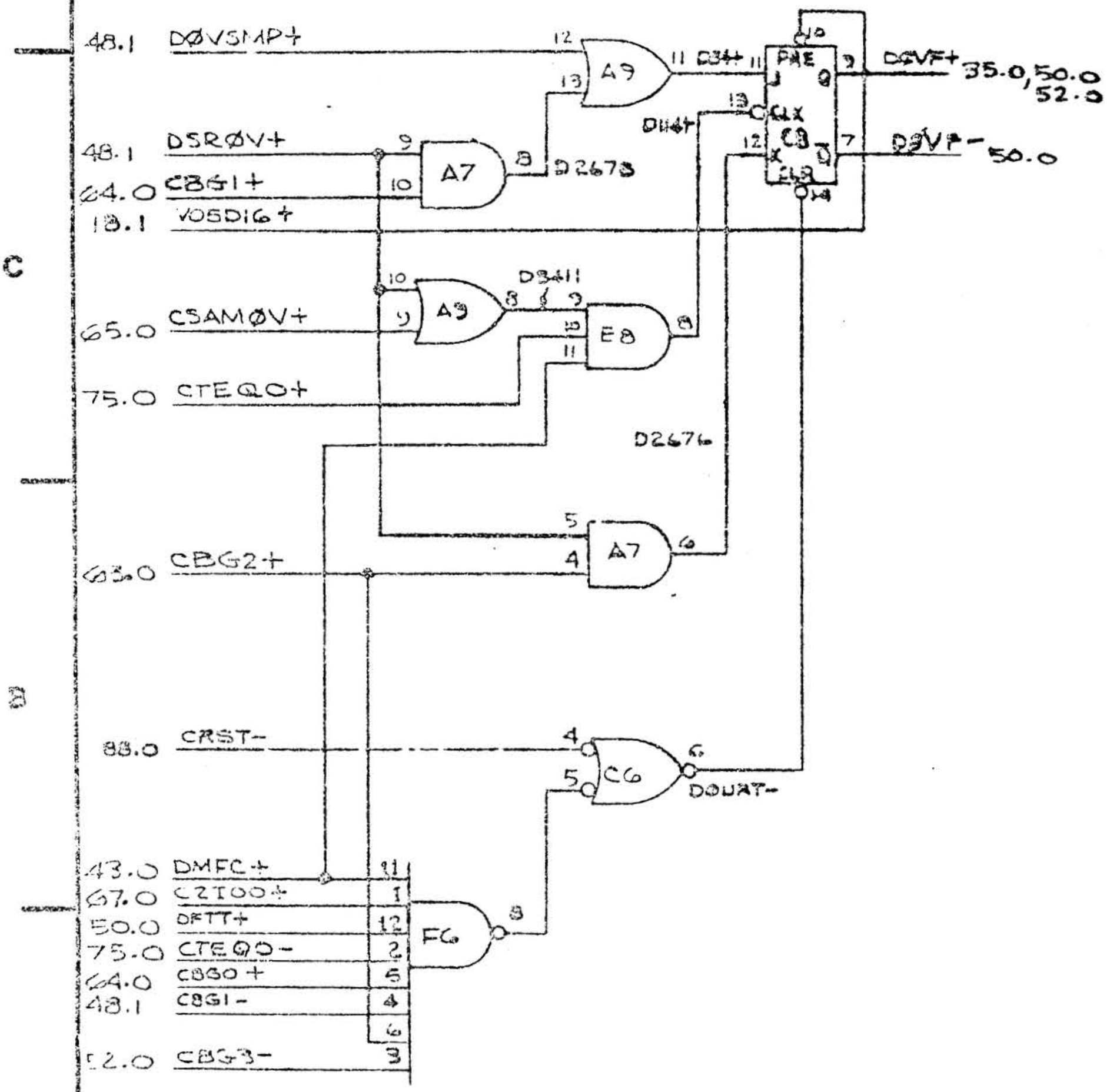

TEST LOGIC OVERFLOW

21101	B	91180378	AT
SCALE		SHEET 43.0	

B C B A

16.1 DØVSMS+

9.0 DFUN3+ → 9 C
10.0 DLB15+ → 10 B
18.2 DLA15+ → 11 A
DAL15− → 3 D1
38.0
12 D7
DAL15A+ → 2 D2
38.0
15 D4
STROBE D0 D3 D5 D6
7 11 1 14 15

M9 1OF 8 MUX

Y 5 DCØVF+ 12 → 13 A7 11 → 48.0 DØVSMP+
W 6

CBG1− 48.0

64.0 CBG1+ → 9 H6 8 CBG1− → 4
5 B5 6 DGXX+ → 13
63.0 CBG2+ → 13 H8 12 CBG2− → 5
1 2 F3 12 DSRØV+ → 48.0
75.0 CSEQ1+
65.0 CSAMØV−

43.0 DMFC+ → 2
65.0 CSAMCC+ → 1
A6 3 DTKL− → 51.0

21101	B	91B0378	AT
SCALE		SHEET 48.1	

1 1

52.0 V05D03+
47.0 DRTS-
11.0 DFAA0-
11.0 DFAA1-
11.0 DFAA0+
43.0 DMFC+
11.0 DFAA1+
44.0 DEKWCF+
11.0 DFAA2-
11.0 DFAA3-
39.0 DALIBA+

J6 J6 K6 K6 J7

DKACL-
DBCL-
DXCL-
DFAIJN+

M6 L6 L6 L6 M6

DA3R- 50.0
DA2R+ 50.0
DB3R- 50.0
DB2R+ 50.0
DX3R- 50.0
DX2R+ 50.0
DASGN+ 50.0,52.0
DASGN- 50.0

620F TEST

21101	B	9180378	AT
SCALE		SHEET 49.0	

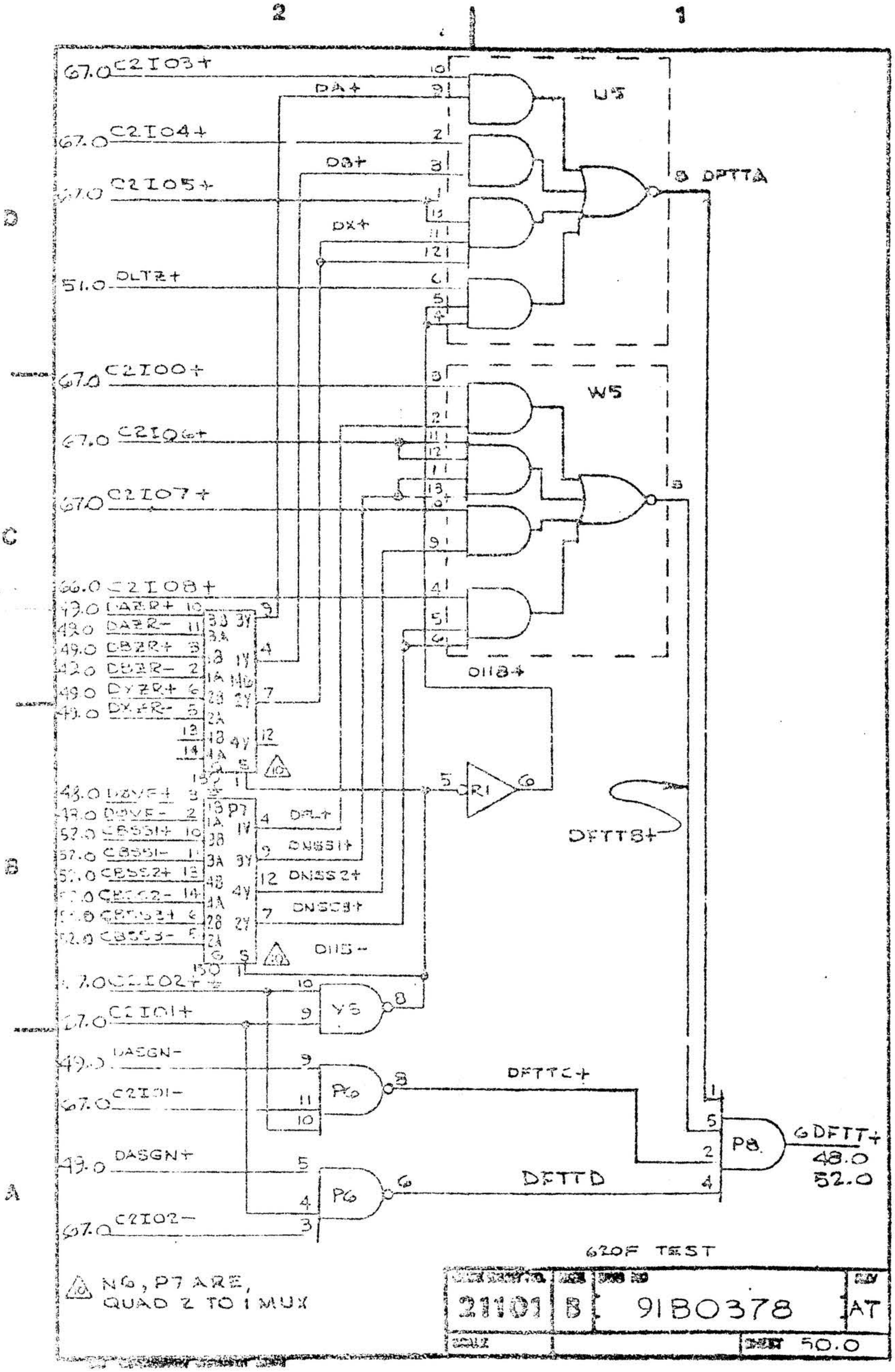

△10 N6, P7 ARE, QUAD 2 TO 1 MUX

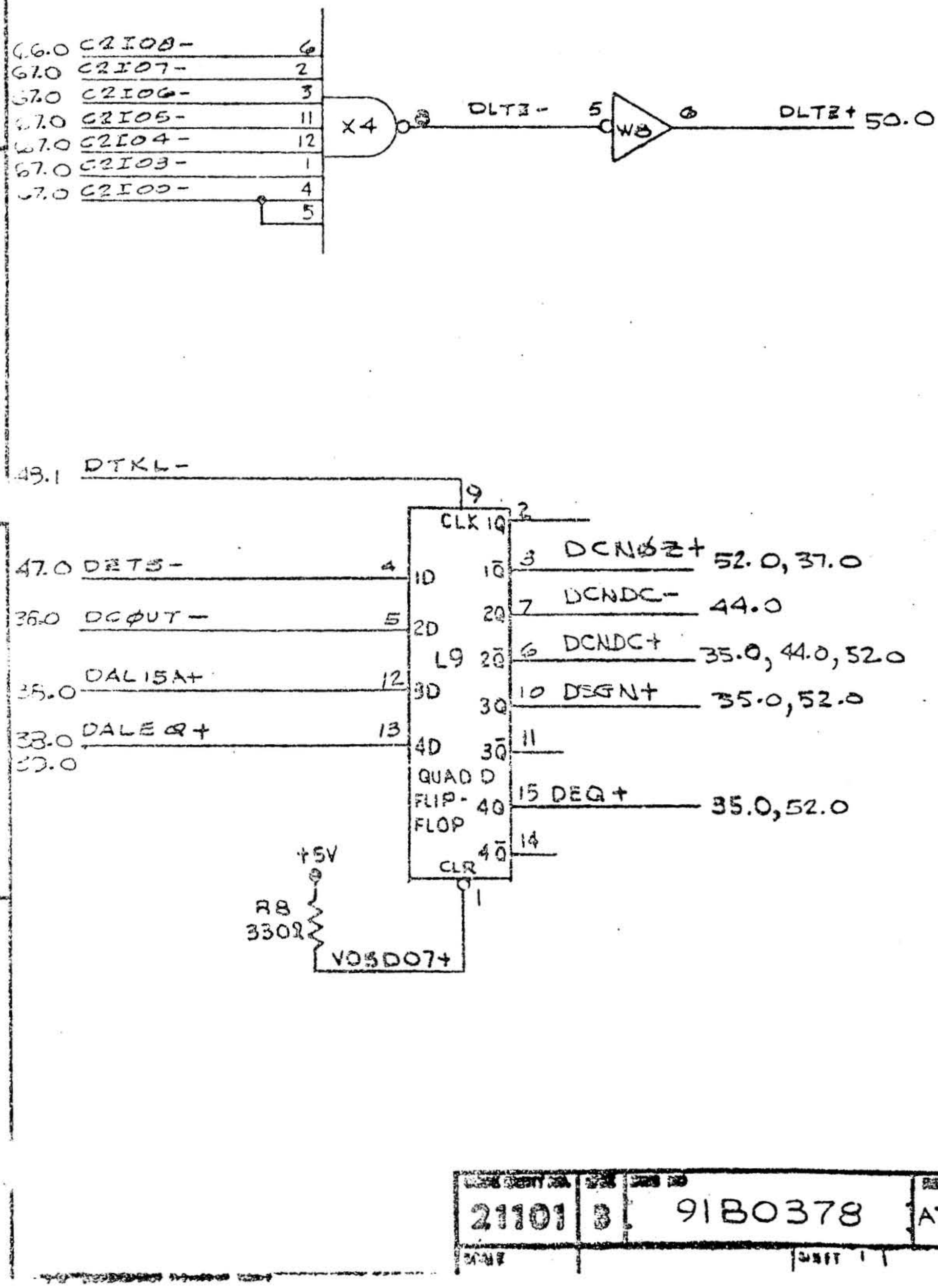

21101	B	91B0378	AT

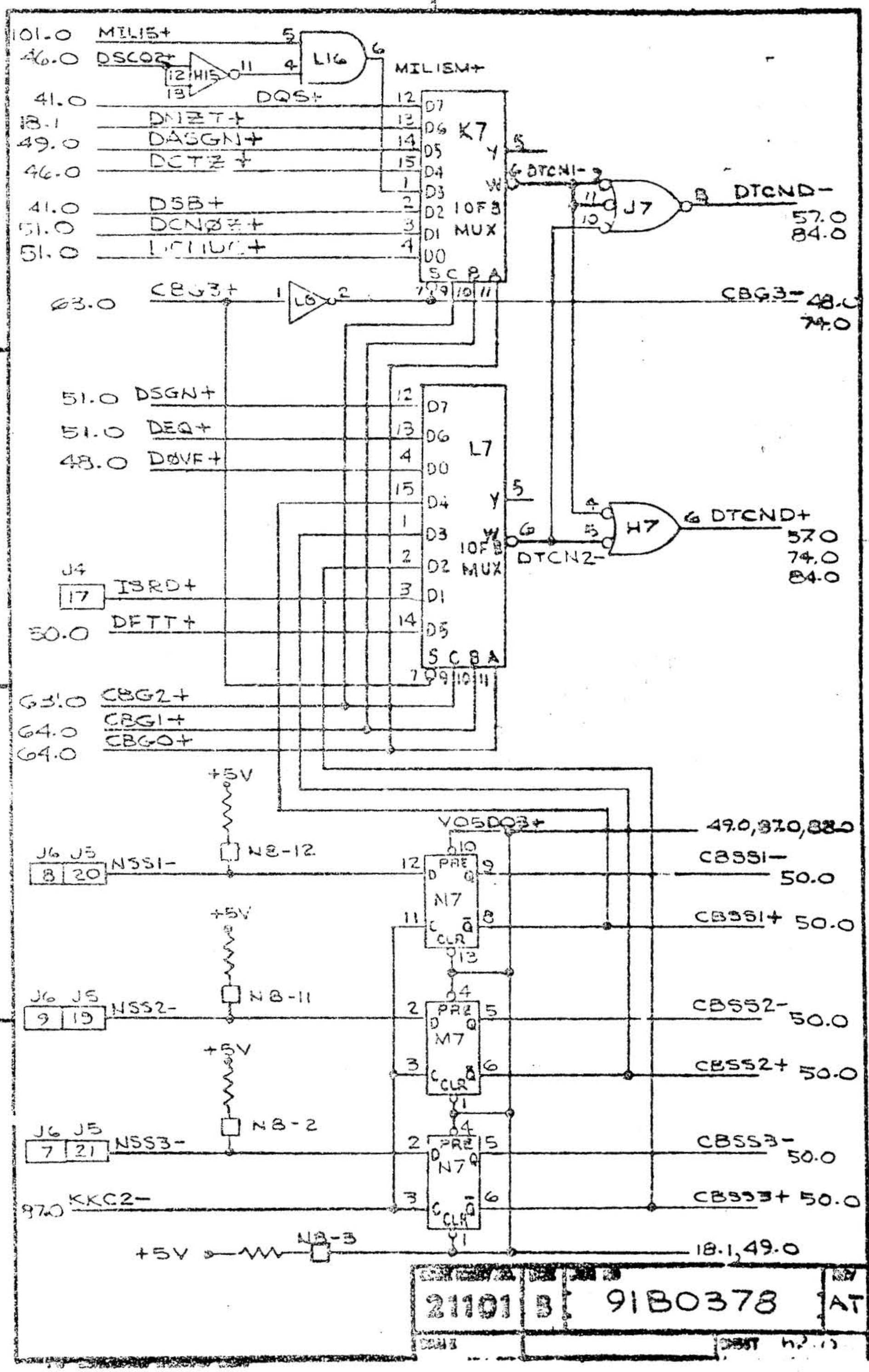
101.0 MILIS+
46.0 DSCO2+
41.0 DQS+
18.1 DNZET+
49.0 DASGN+
46.0 DCTZ+
41.0 DSB+
51.0 DCNØVF+
51.0
MILISM+
L16
H15
K7
L7
M7
N7
J7
H7
L8
DTCN1-
DTCN2-
DTCND-
DTCND+
57.0
84.0
74.0
CBG3+
63.0
CBG3-
48.0
51.0 DSGN+
51.0 DEQ+
48.0 DØVF+
J4
17 ISRD+
DFTT+
30.0
63.0 CBG2+
64.0 CBG1+
64.0 CBG0+
+5V
NB-12
NB-11
NB-2
NB-3
J6 J5
8 20 NSS1-
9 19 NSS2-
7 21 NSS3-
97.0 KKC2-
YO5DO3+
49.0,57.0,88.0
CBSS1-
50.0
CBSS1+ 50.0
CBSS2- 50.0
CBSS2+ 50.0
CBSS3- 50.0
CBSS3+ 50.0
18.1,49.0
21101 B 91B0378 AT

+5V

R1
330Ω

CBPULL+ 53.0, 54.0, 55.0, 56.0

512X8ROM

M1

CEAD8-	6	A8	STROBE	18			
56.0,58.0,79.0,88.0							
CEAD7-	5	A7	O8	17	CBI67+	J3 12	61.0
56.0,58.0,79.0,88.0							
CEAD6-	4	A6	O7	16	CBI66+	23	61.0, 117.0
56.0,58.0,79.0,88.0							
CEAD5-	3	A5	O6	15	CBI65+	24	61.0, 117.0
56.0,58.0,79.0,88.0							
CEAD4-	2	A4	O5	14	CBI64+	25	61.0, 117.0
56.0, 58.0, 79.0							
CEAD3-	1	A3	O4	10	CBI53+	22	61.0, 117.0
56.0, 59.0, 78.0							
CEAD2-	23	A2	O3	9	CBI52+	20	61.0, 117.0
56.0, 59.0, 78.0							
CEAD1-	22	A1	O2	8	CBI51+	40	61.0, 117.0
56.0, 60.0, 77.0							
CEAD0-	21	A0	O1	7	CBI50+	41	61.0
56.0, 60.0, 77.0							

CE2 CE1

19 20

53.0, 117.0
54.0, 55.0
56.0

J3 11 — XCSEN+

R38
100Ω 1/2W
+5V

53.0 CBPULL+

512X8ROM

K1

CEAD8-	6	A8	STROBE	18			
56.0, 79.0, 88.0							
CEAD7-	5	A7	O8	17	CBI57+	J3 14	62.0, 117.0
56.0, 58.0, 79.0, 88.0							
CEAD6-	4	A6	O7	16	CBI54+	15	62.0, 117
56.0, 58.0, 79.0, 88.0							
CEAD5-	3	A5	O6	15	CBI53+	2	62.0, 117
56.0, 58.0, 79.0, 88.0							
CEAD4-	2	A4	O5	14	CBI52+	17	62.0, 117
56.0, 58.0, 79.0							
CEAD3-	1	A3	O4	10	CBI51+	22	62.0, 117
56.0, 59.0, 78.0							
CEAD2-	23	A2	O3	9	CBI50+	25	62.0, 117
56.0, 59.0, 78.0							
CEAD1-	22	A1	O2	8	CBI49+	27	62.0, 117
56.0, 60.0, 77.0							
CEAD0-	21	A0	O1	7	CBI48+	26	62.0, 117
56.0, 60.0, 77.0							

CE2 CE1

19 20

XCSEN+

53.0, 117.0

CONTROL STORE 1

CODE IDENT NO.	SIZE	DWG NO	REV
21101	B	91B0378	AT
SCALE			SHEET 53.0

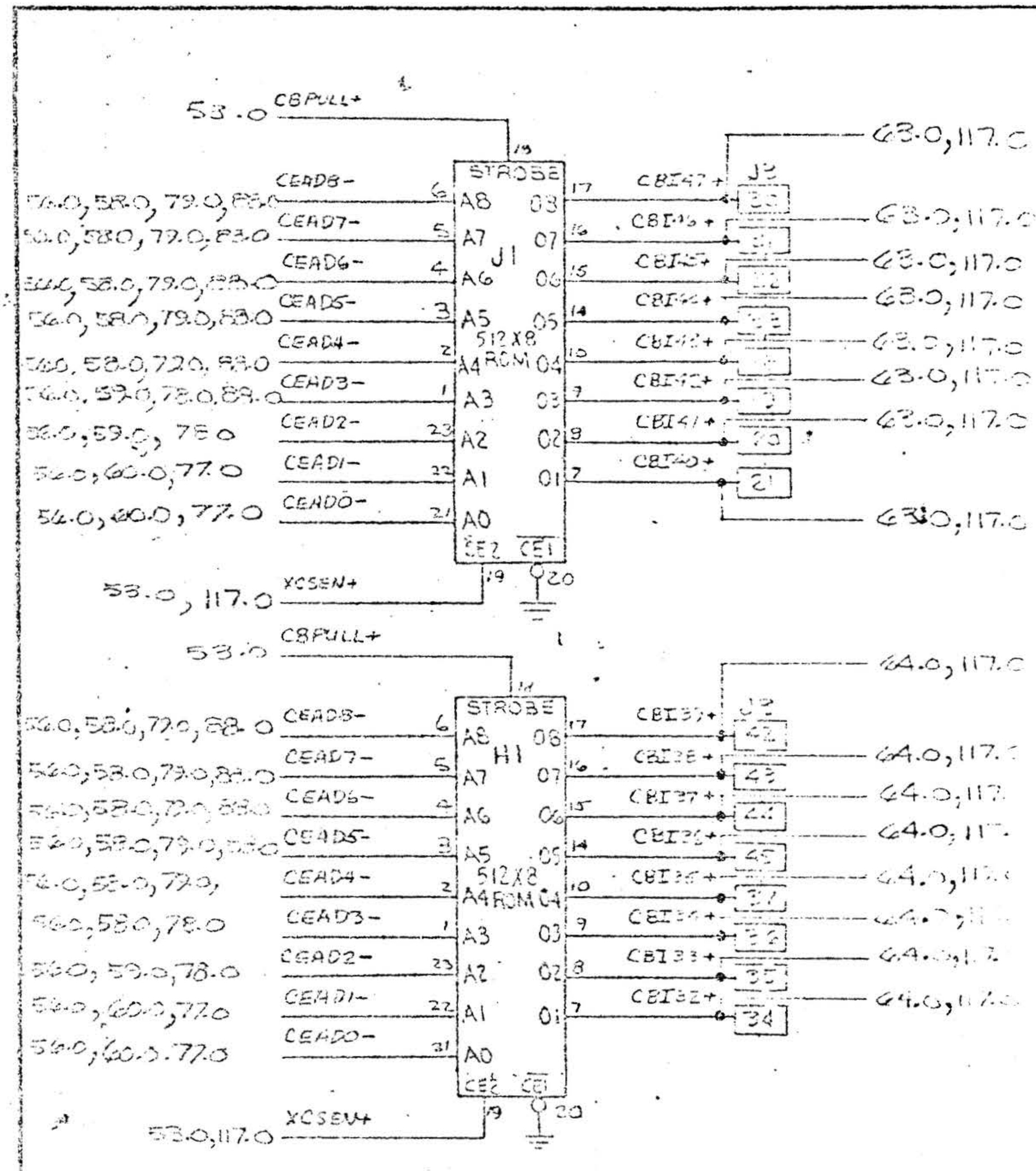

CONTROL STORE 2

CODE IDENT NO.	SIZE	DWG NO	REV
21101	B	21BC372	T
SCALE		SHEET 54.0	

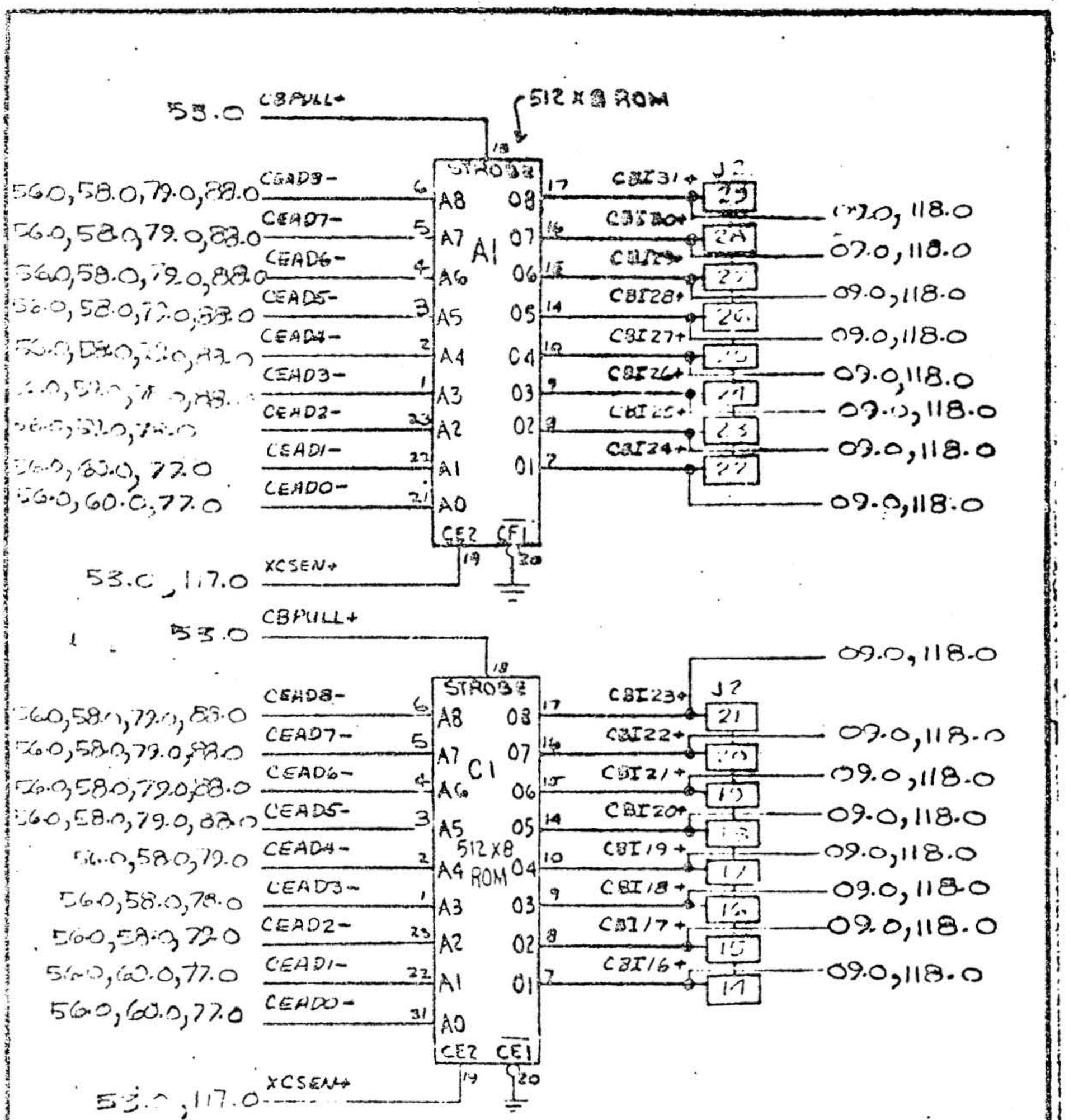
53.0 CBPULL+
512 X 8 ROM
STROBE
A8
A7
A6
A5
A4
A3
A2
A1
A0
A1
CE2
CE1
O8
O7
O6
O5
O4
O3
O2
O1
CEAD8-
CEAD7-
CEAD6-
CEAD5-
CEAD4-
CEAD3-
CEAD2-
CEAD1-
CEAD0-
XCSEN+
CBI31+
CBI30+
CBI29+
CBI28+
CBI27+
CBI26+
CBI25+
CBI24+
J2
C1
CBI23+
CBI22+
CBI21+
CBI20+
CBI19+
CBI18+
CBI17+
CBI16+
J7
CONTROL STORE 3
21101
B
91B0378
AT
SHEET 55.0

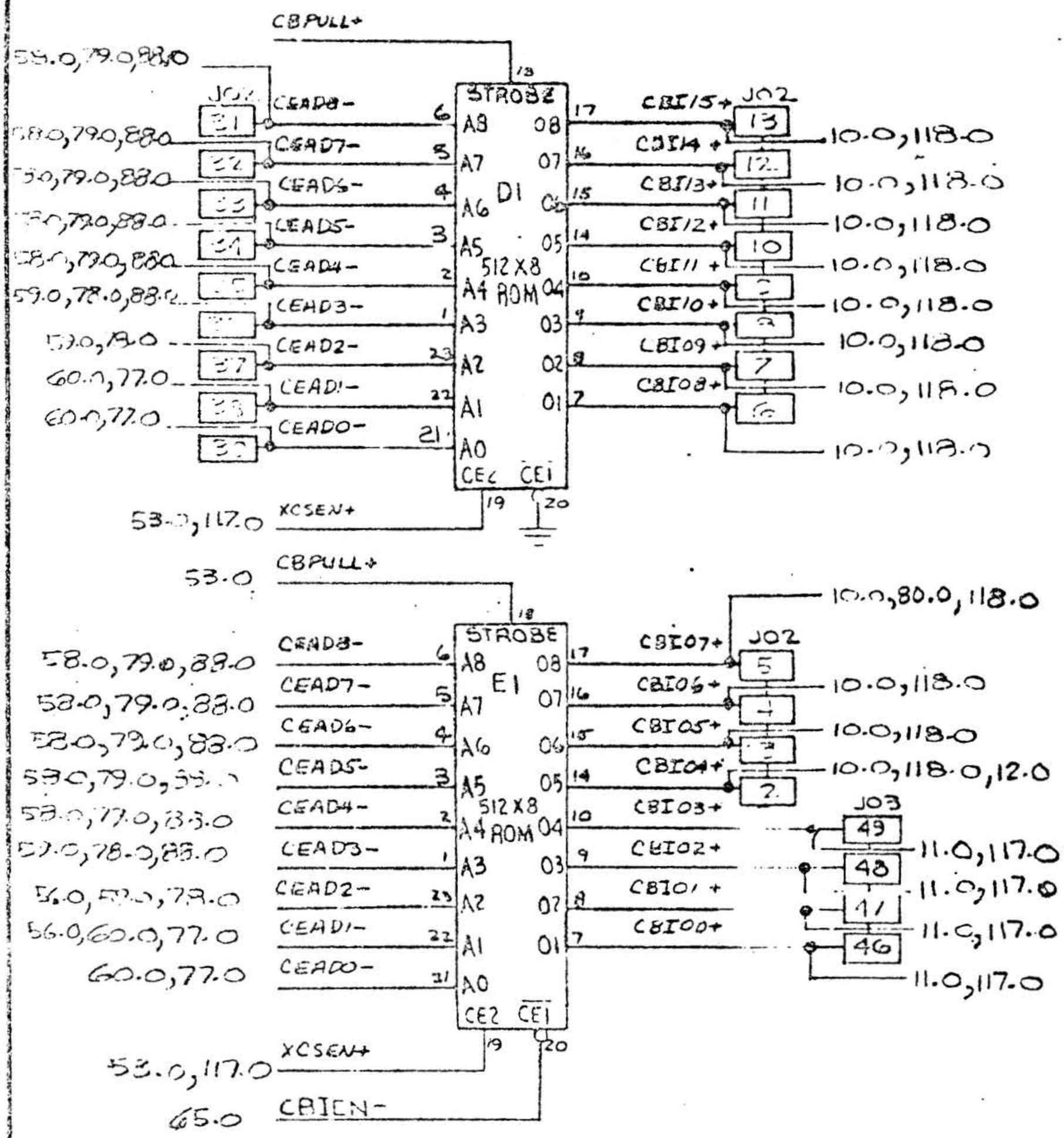

CONTROL STORE 4

CODE IDENT NO.	SIZE	DWG NO	REV
21101	B	91B0378	AT
SCALE			SHEET 56.0

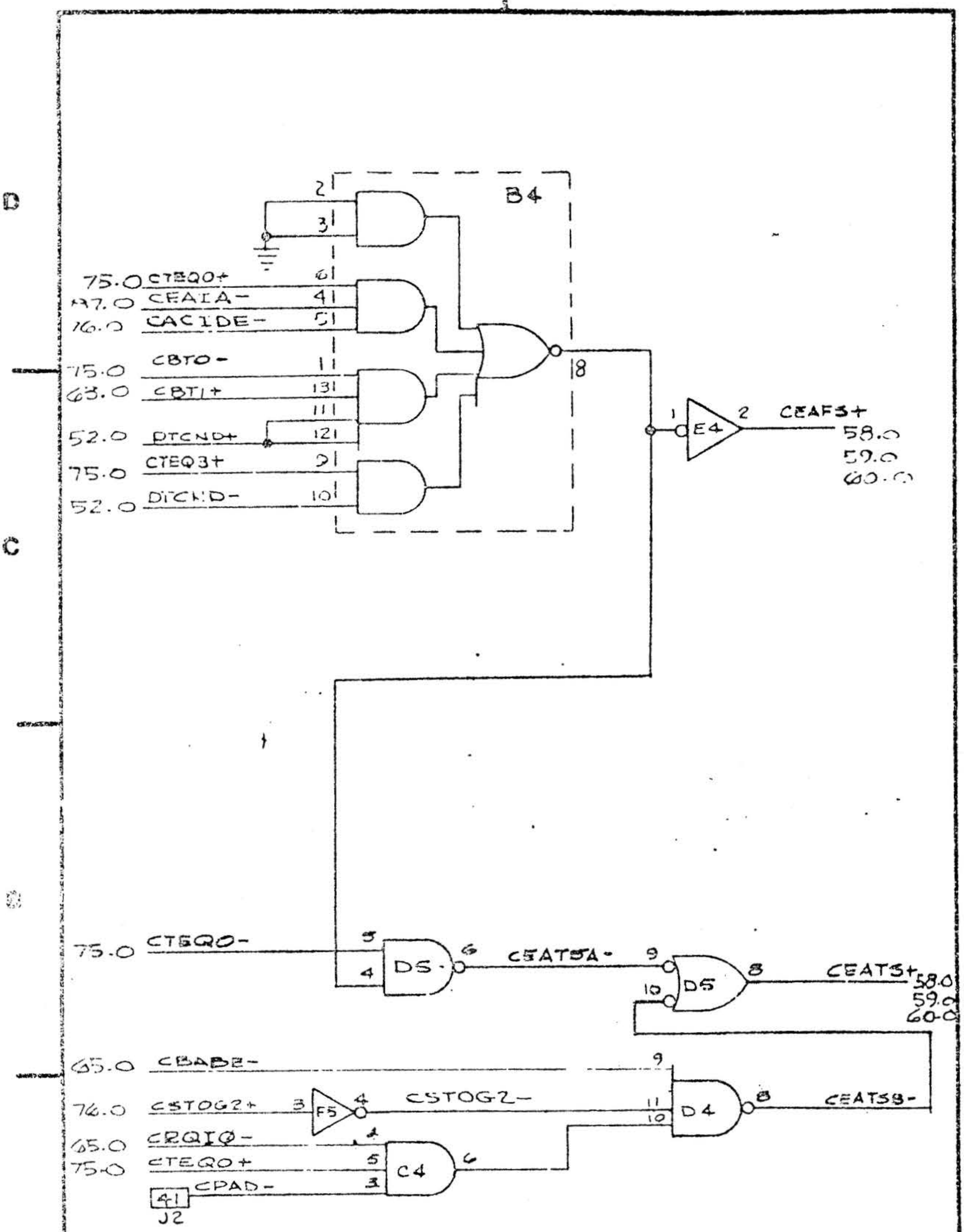
B4
2
3
75.0 CTEQ0+
6
47.0 CEAIA-
4
16.0 CACIDE-
5
75.0 CBTO-
11
63.0 CBT1+
13
11
52.0 DTCND+
12
75.0 CTEQ3+
9
52.0 DTCND-
10
8
1
E4
2
CEAF3+
58.0
59.0
60.0
75.0 CTEQ0-
5
4
D5
6
CEAT5A-
9
10
D5
8
CEAT5+
58.0
59.2
60.0
65.0 CBABE-
9
76.0 CSTOG2+
3
F5
4
CSTOG2-
11
10
D4
8
CEAT59-
65.0 CRQIQ-
2
75.0 CTEQ0+
5
3
C4
6
41
CPAD-
J2
CONTROL STORE ADDRESS CONTROL
21101
B
91B0378
AT
SCALE
SHEET 57.0

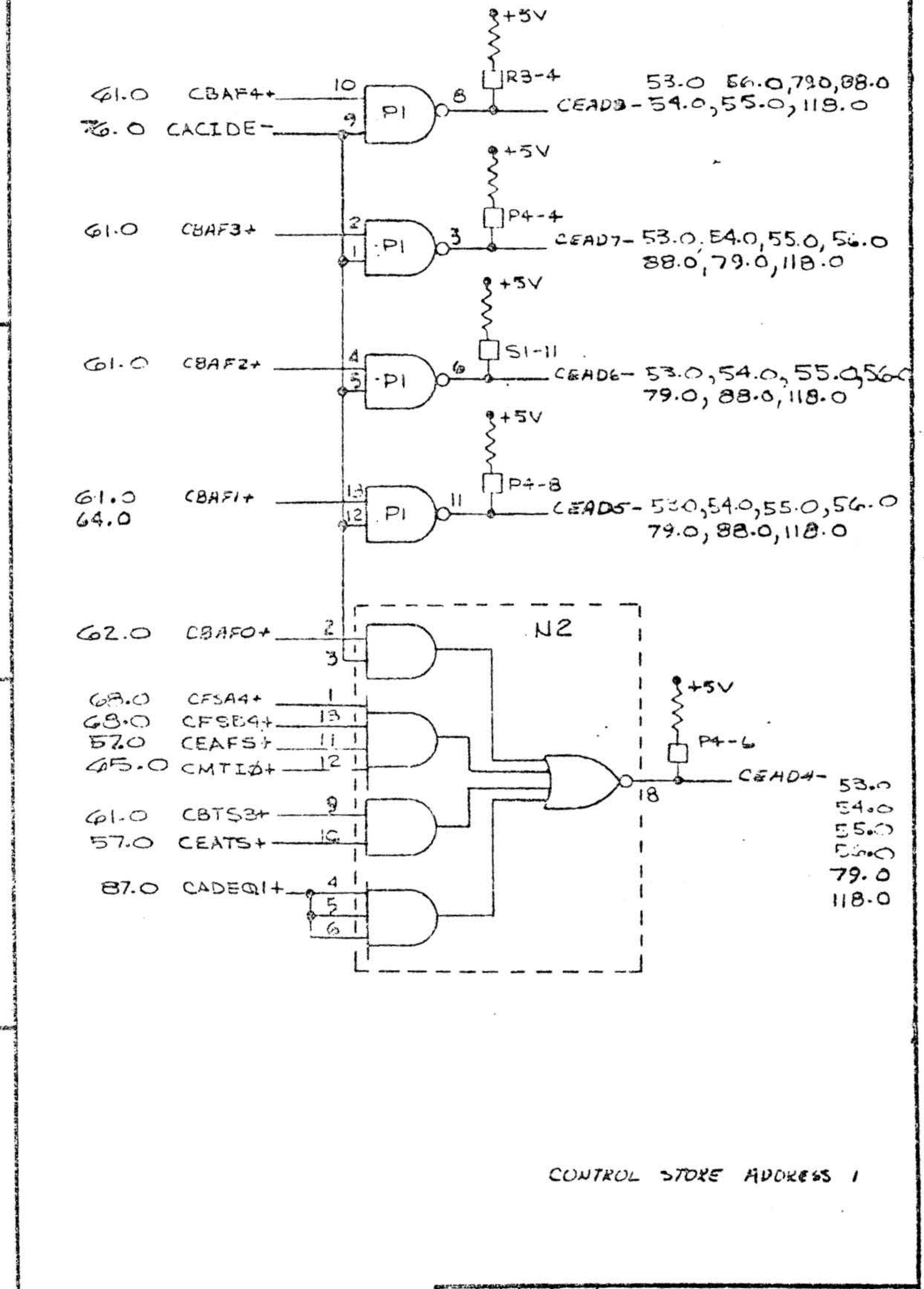

21101	B	91B0378	AT
SCALE		SHEET 3A.0	

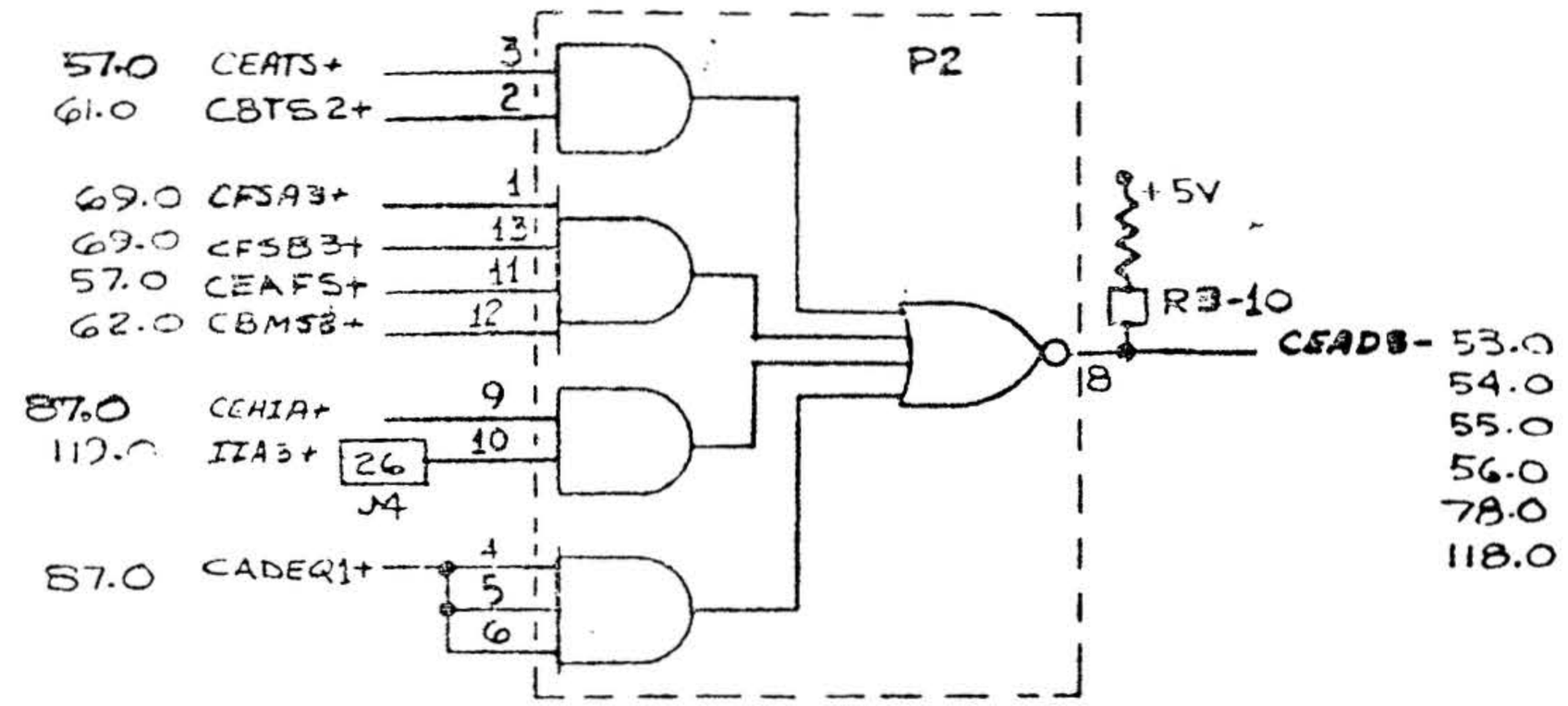

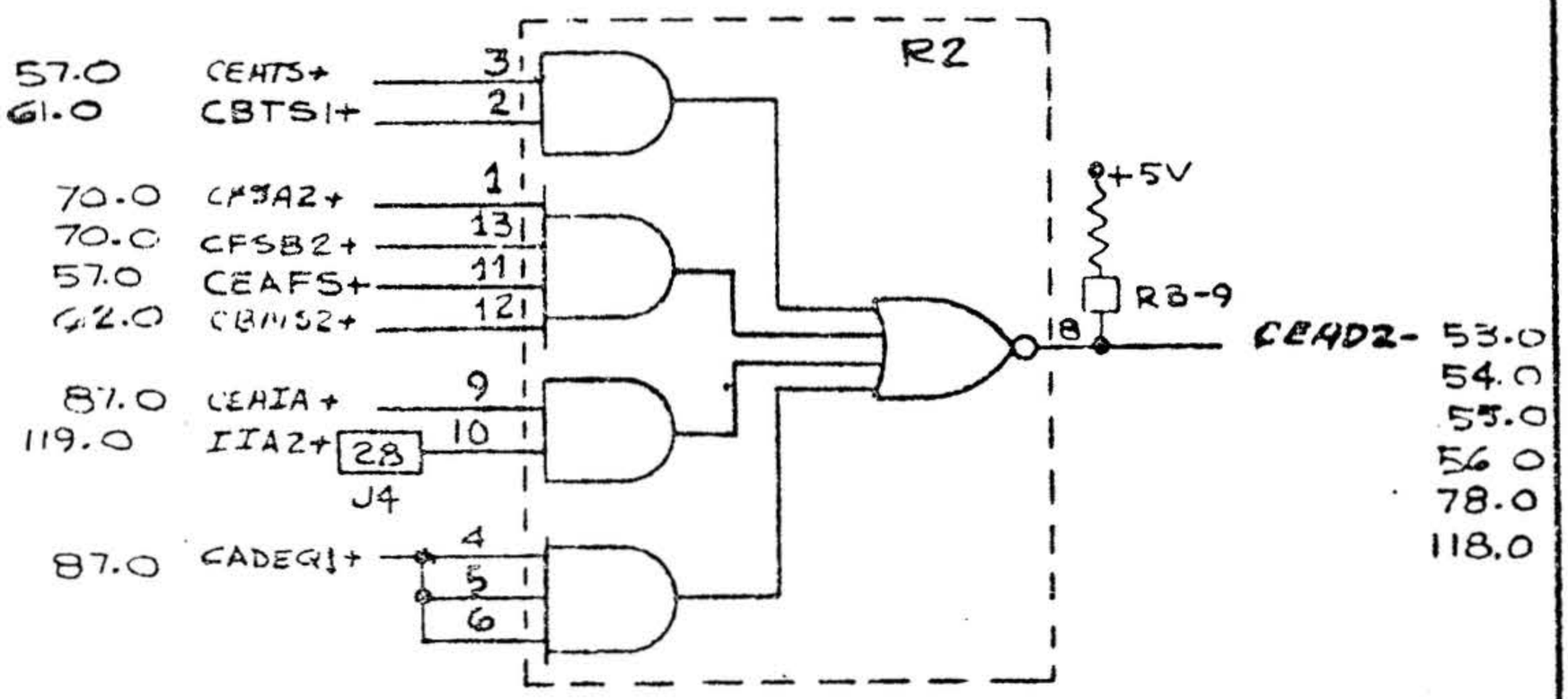

CONTROL STORE ADDRESS 2

CODE IDENT NO.	SIZE	DWG NO	REV
21101	B	91B0378	AT
SCALE			SHEET 59.0

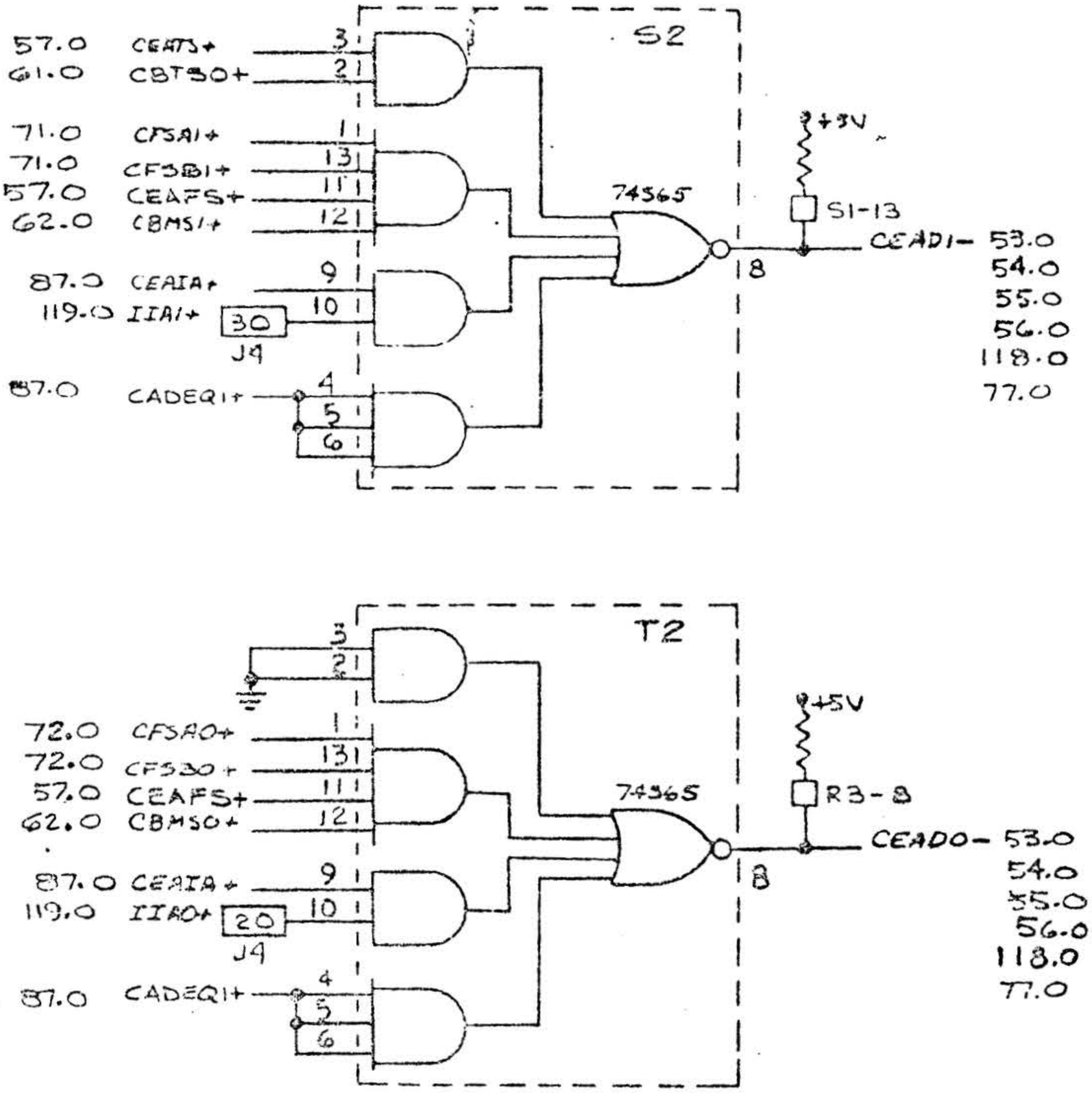

CONTROL STORE ADDRESS 8

21101	B	91B0378	AT
SCALE		SHEET 60.0	

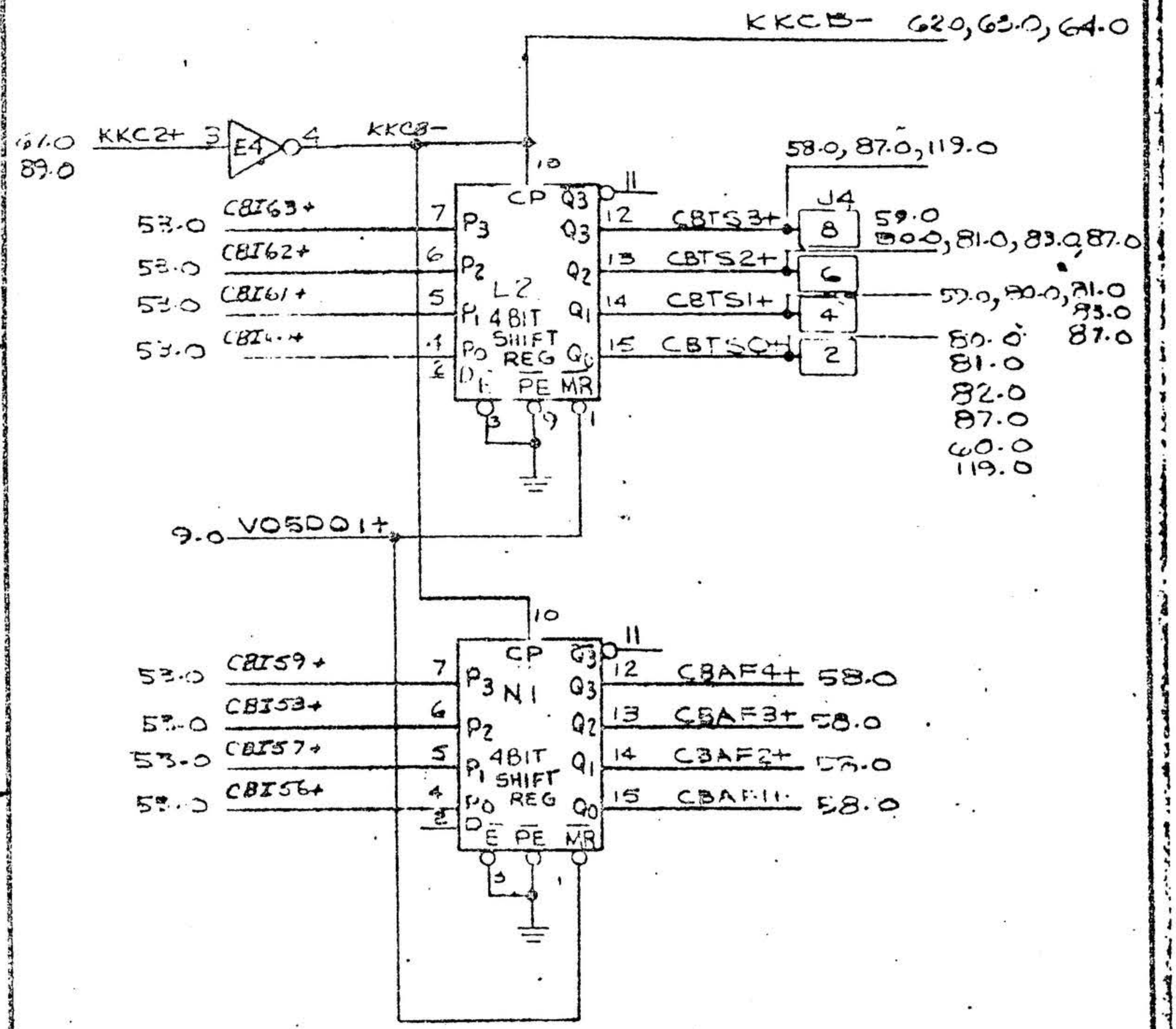

CONTROL BUFFER 1

CODE IDENT NO.	SIZE	DWG NO	REV
21101	B	91B0378	AT
SCALE		SHEET 61	

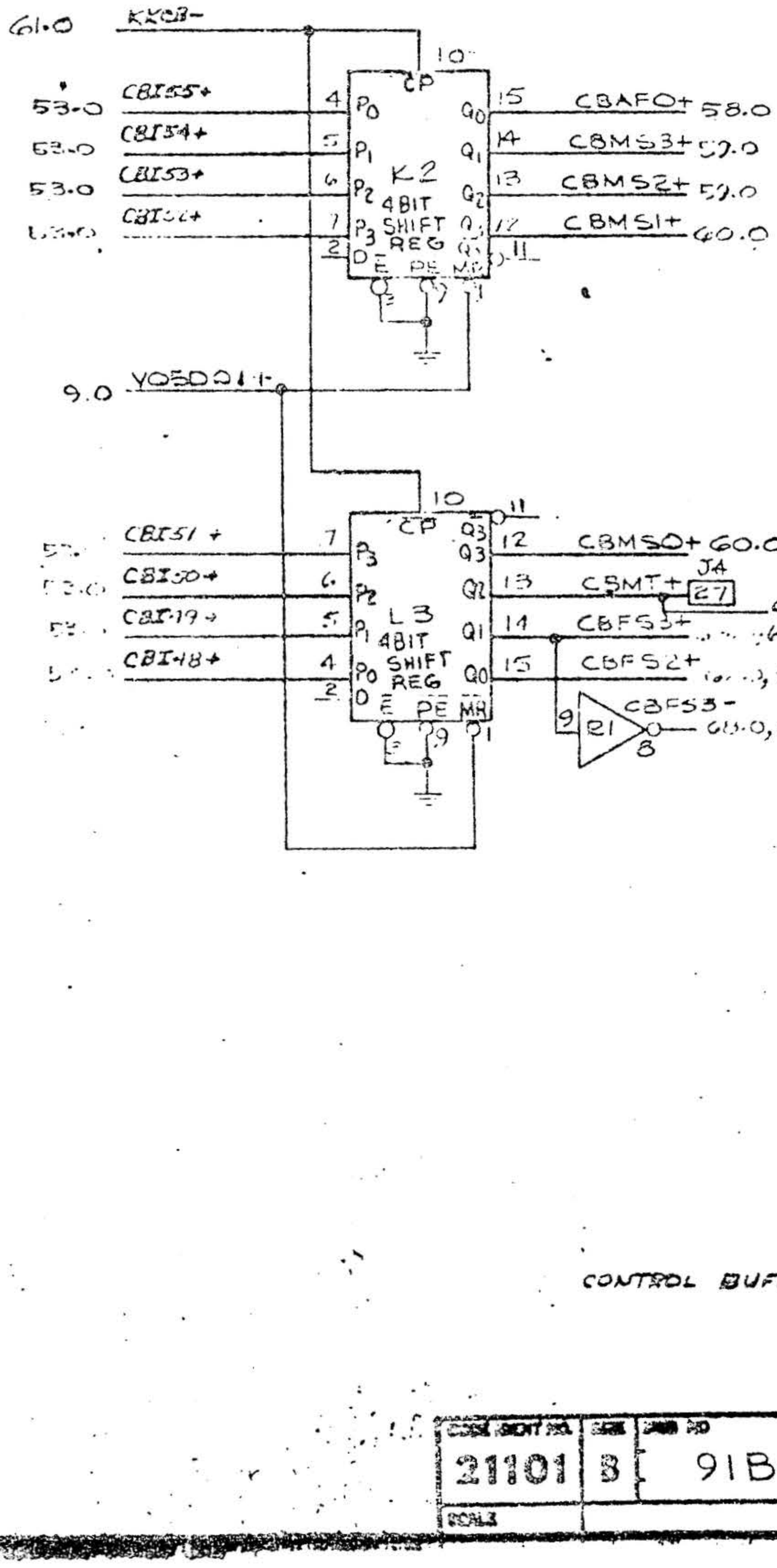

CONTROL BUFFER 2

21101	B	91B0378	AT
SCALE			SHEET 62, C.

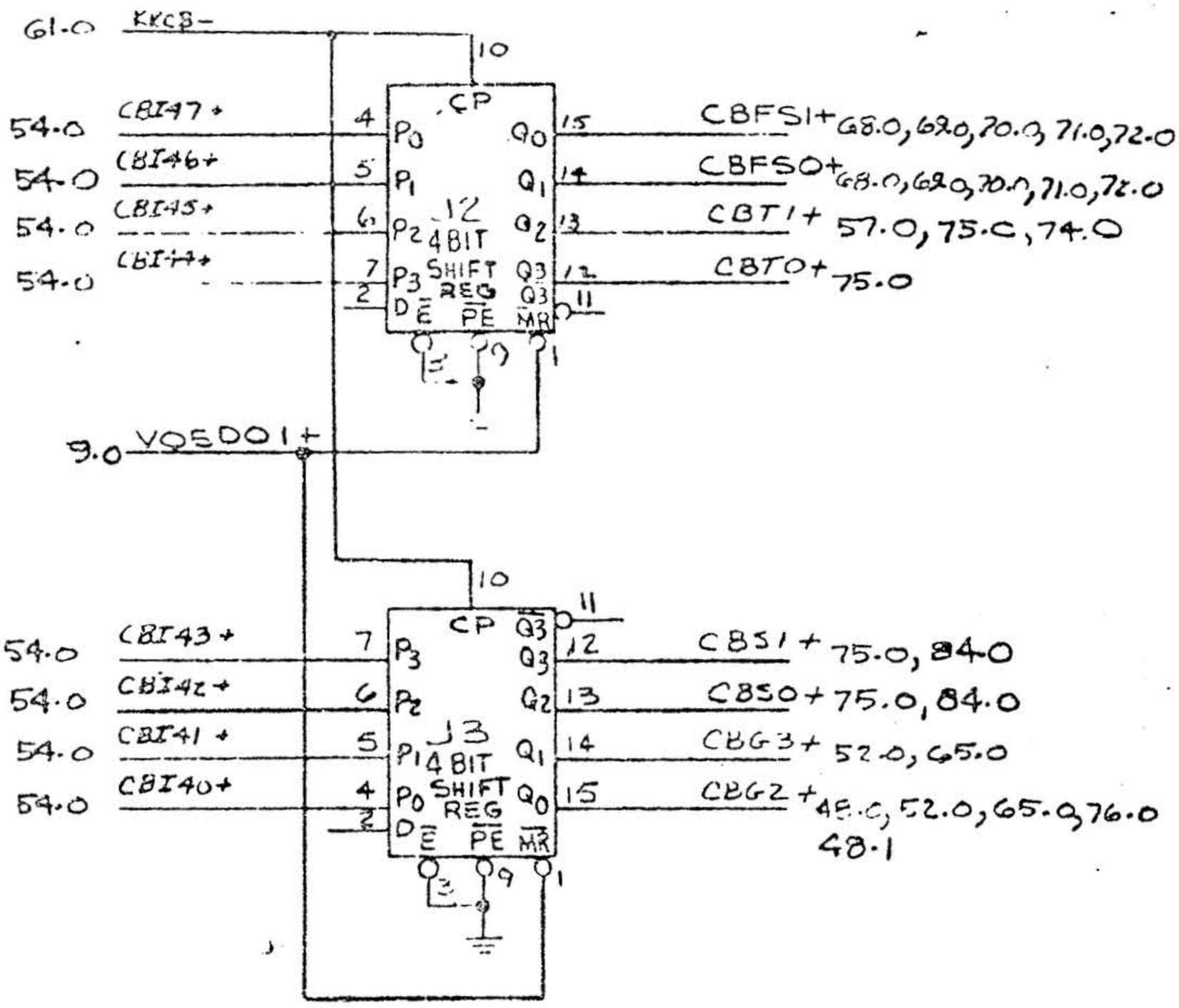

CONTROL BUFFER 3

CODE IDENT NO.	SIZE	DWG NO	REV
21101	B	91B0378	AT
SCALE			SHEET 63.

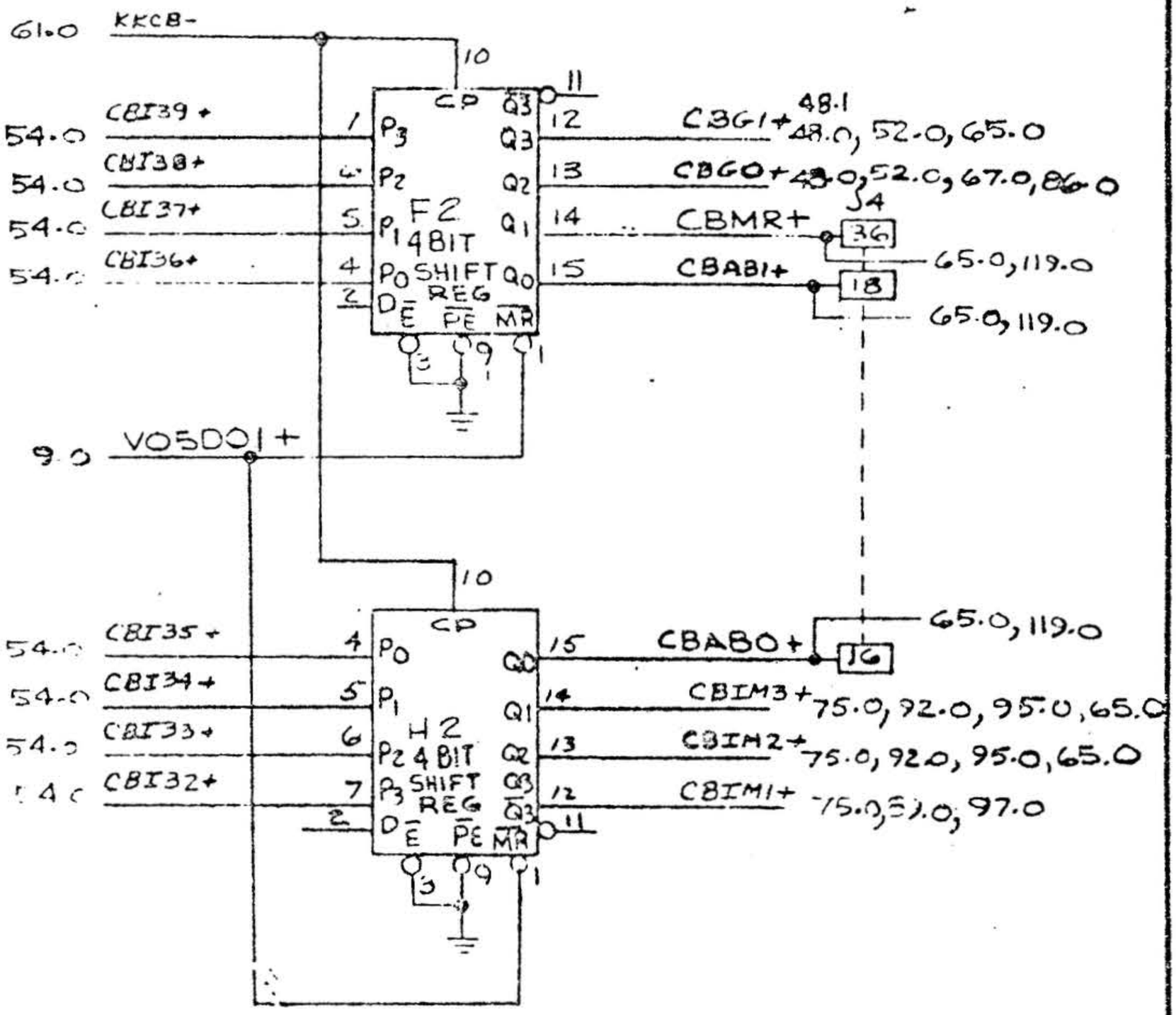

CONTROL BUFFER 4

CODE IDENT NO.	SIZE	DWG NO	REV
21101	B	91B0378	AT
SCALE			SHEET 6

D

C

B

A

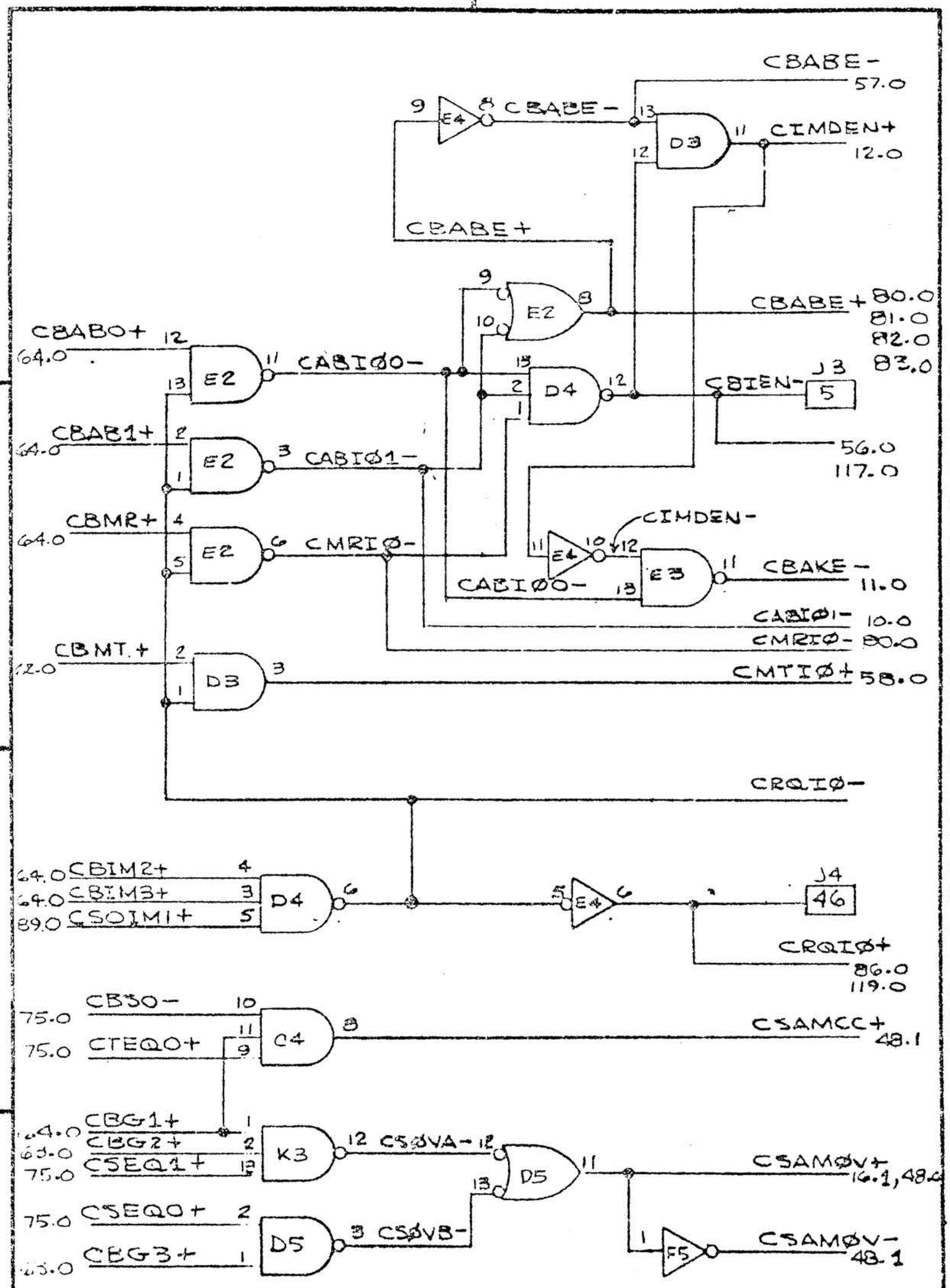

CODE IDENT NO.	SIZE	DWG NO	REV
21101	B	91B0378	AT
SCALE			SHEET 65.0

2 1

D

67.0 KKCI1+12
89.0 KKC2+ 13
H4 11
KKCI3+
4 13
CLK 3-4 CLK 1-2
101.0 MII15+ 2 1D 1Q 16 → 1 1Q → C2I15- 26.0, 68.0
101.0 MII14+ 3 2D 2Q 15 → 14 2Q → C2I14- 26.0, 68.0, 69.0
101.0 MII13+ 6 3D 3Q 10 → 11 3Q → C2I13- 27.0, 68.0, 69.0, 70.0
101.0 MII12+ 7 4D 4Q 9 → 8 4Q → C2I12- 27.0, 68.0, 69.0, 70.0, 71.0
Z4
4 BIT BISTABLE LATCH

C

67.0 KKCI2+
CLK 3-4 CLK 1-2
102.0 MII11+ 2 1D 1Q 16 → 1 1Q → C2I11- 28.0, 68.0, 69.0, 70.0, 71.0, 72.0
102.0 MII10+ 3 2D 2Q 15 → 14 2Q → C2I10+ 50.0 / C2I10- 28.0, 68.0, 70.0, 71.0, 72.0
102.0 MII09+ 6 3D 3Q 10 → 11 3Q → C2I09+ 80.0, 81.0 / C2I09- 29.0, 68.0, 69.0, 70.0, 71.0, 72.0
102.0 MII08+ 7 4D 4Q 9 → 8 4Q → C2I08+ 50.0, 80.0, 81.0, 82.0 / C2I08- 29.0, 71.0, 68.0, 69.0, 70.0, 71.0, 72.0
Y4
4 BIT BISTABLE LATCH

B

A

CONTROL INSTRUCTION REGISTER 1

CODE IDENT NO.	SIZE	DWG NO	REV
21101	B	91B0378	AT
SCALE		SHEET 66.0	

2 1

D

C

B

A

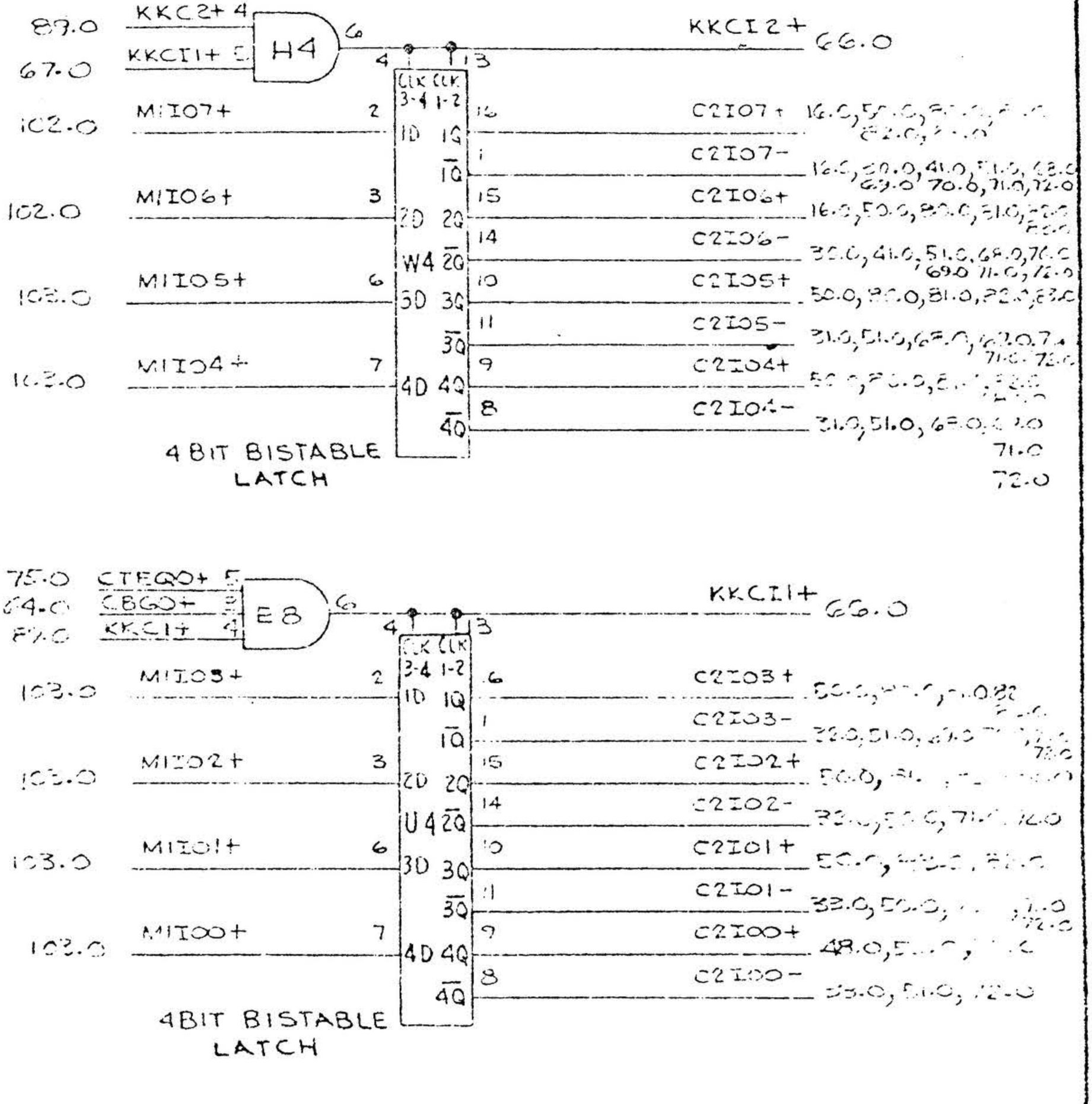

CONTROL INSTRUCTION REGISTER 2

CODE IDENT NO.	SIZE	DWG NO	REV
21101	B	91B0378	AT
SCALE		SHEET 67.5	

Fold to here.

IBM Flowcharting Worksheet

Printed in U.S.A.
GX20-8021-2 U/M 650
Revised 5/75

Fold to here.

Programmer: _____ Program No.: _____ Date: _____ Page: _____

Chart ID: ___ Chart Name: _____ Program Name: _____

A1 | A2 FUNINT | A3 | A4 FUNCOL DISP | A5

B1 | B2 SCHEDULE FUNOIL | B3 | B4 | B5

C1 | C2 | C3 | C4 | C5

D1 | D2 | D3 | D4 | D5

E1 | E2 | E3 | E4 | E5

F1 | F2 | F3 | F4 | F5

Fold under at dotted line.

Fold under at dotted line.

G1 | G2 | G3 | G4 | G5

H1 | H2 | H3 | H4 | H5

J1 | J2 | J3 | J4 | J5

K1 | K2 | K3 | K4 | K5

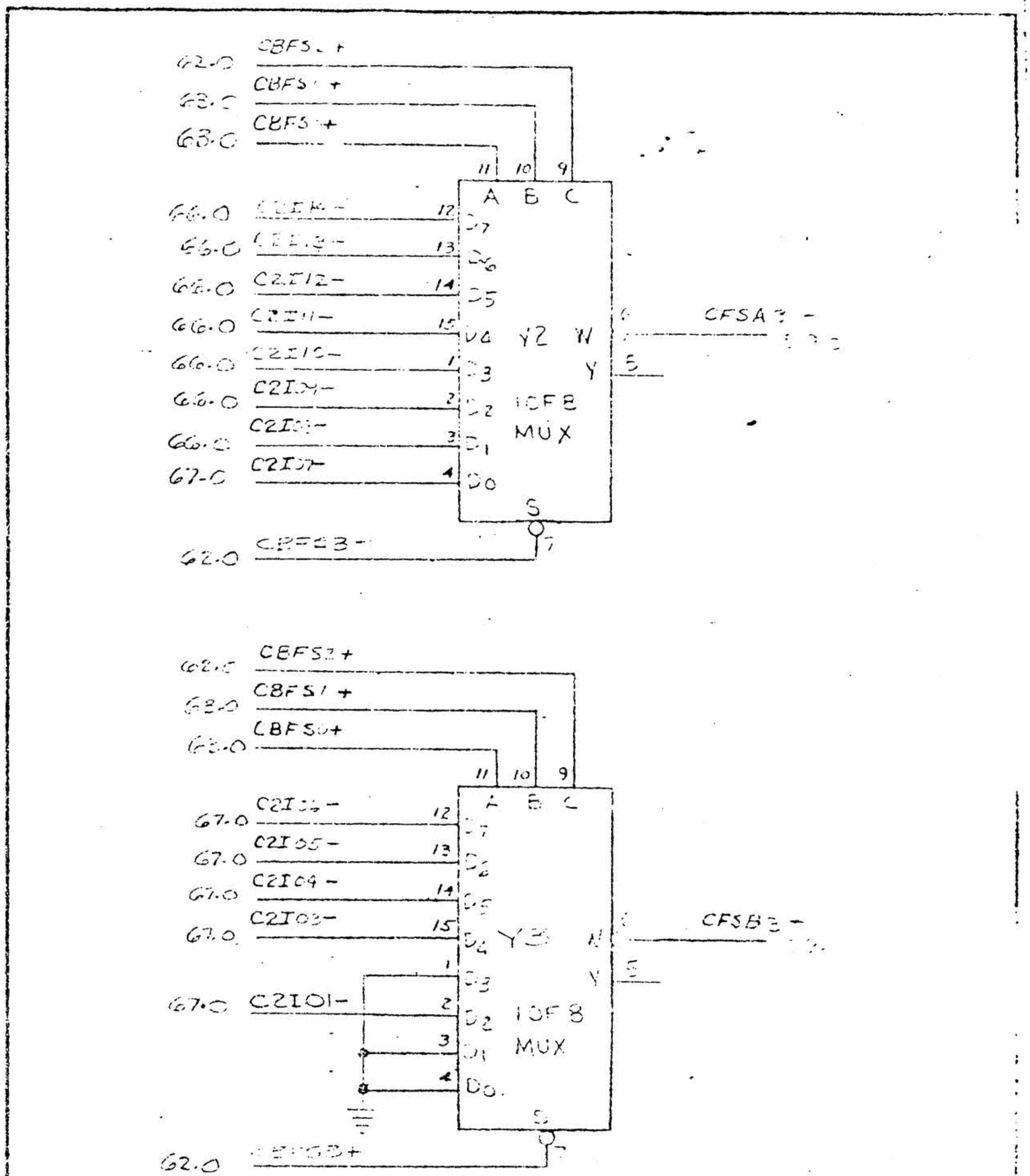

INSTRUCTION FIELD SELECT

CODE IDENT NO.	SIZE	DWG NO	REV
21101	B	91EC378	AT
SCALE			SHEET

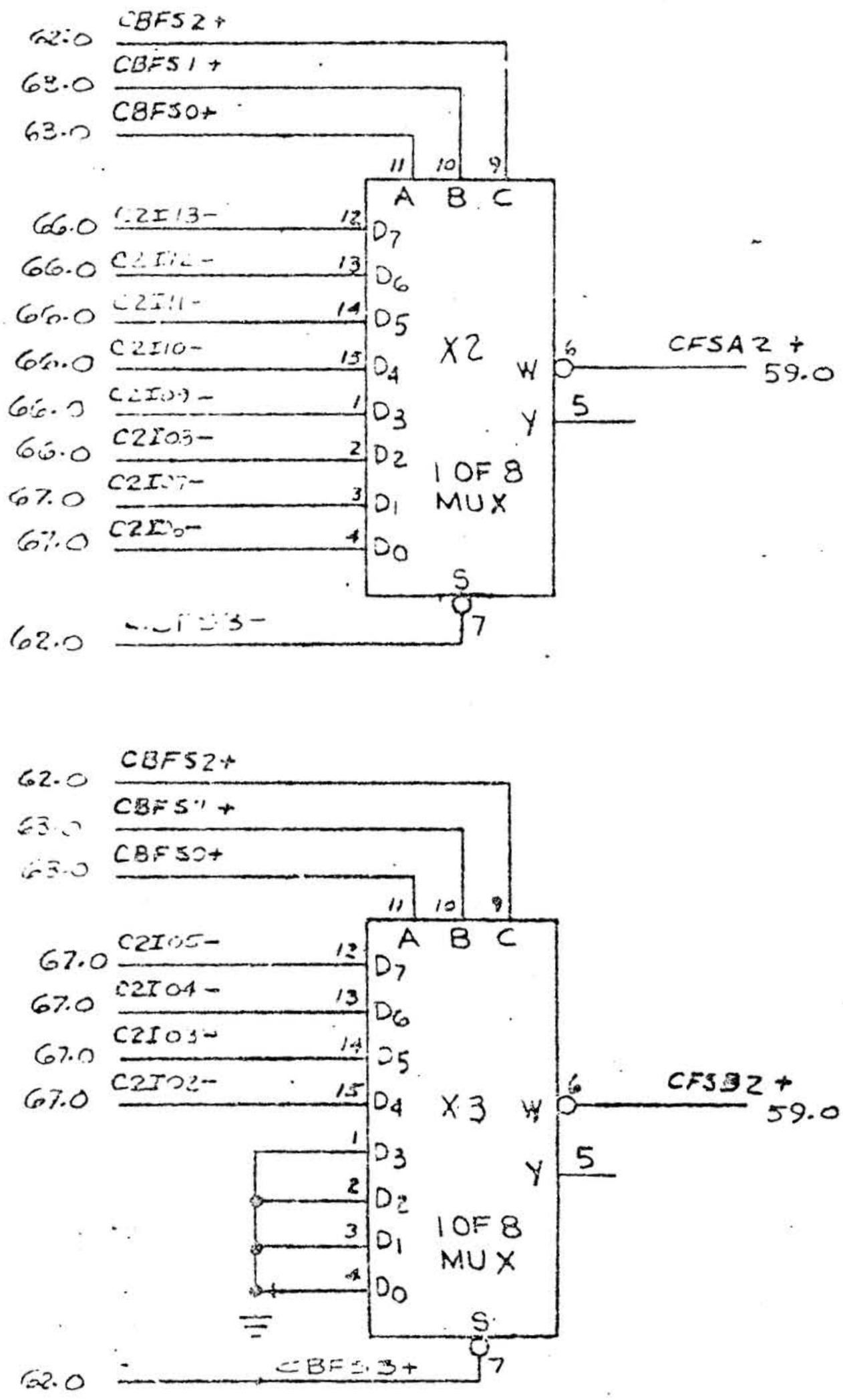

INSTRUCTION FIELD SELECT 3

CODE IDENT NO.	SIZE	DWG NO.	REV
21101	B	91B0378	AT
SCALE			SHEET NO.

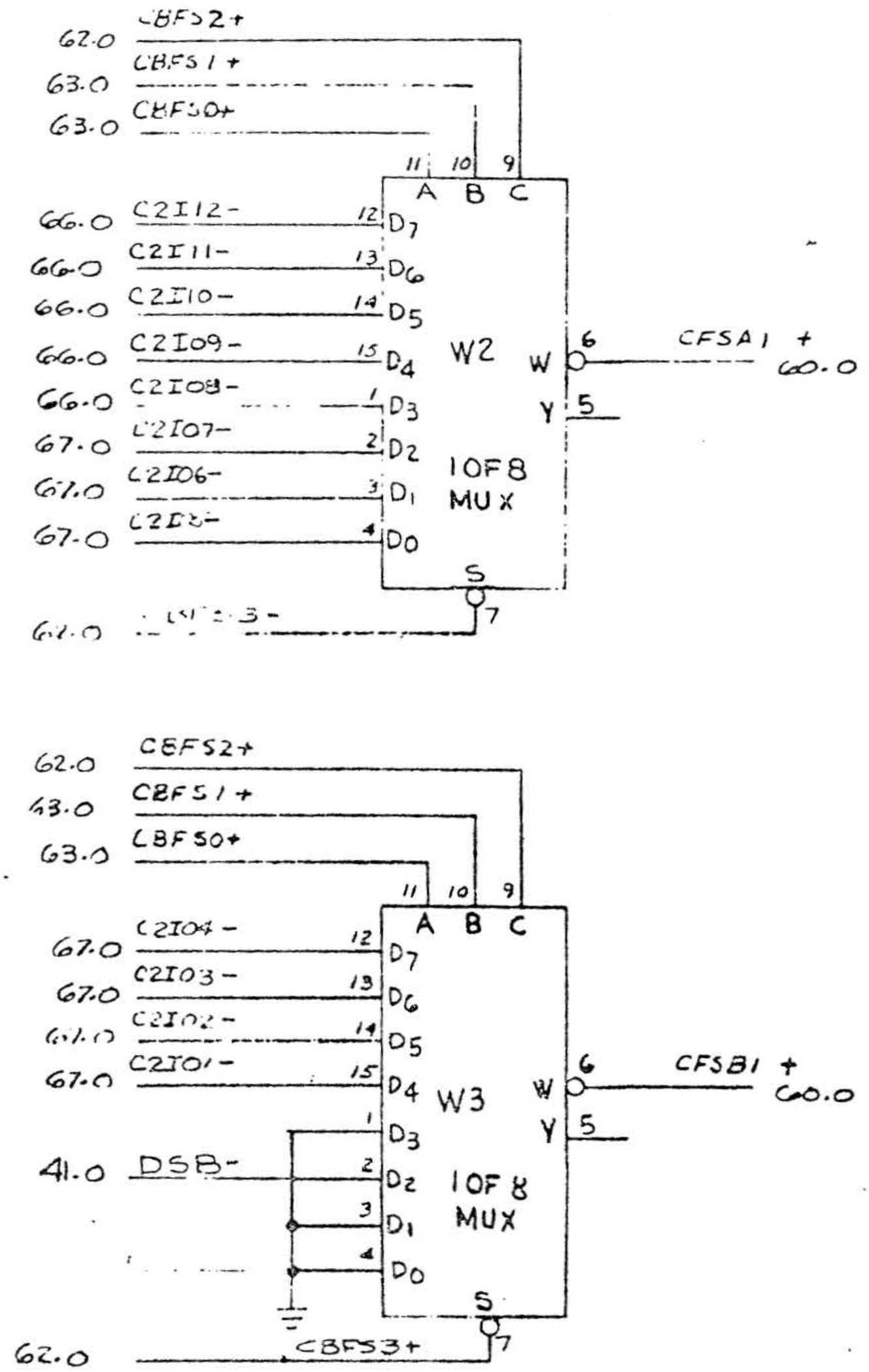

INSTRUCTION FIELD SELECT 4

CODE IDENT NO.	SIZE	DWG NO	REV
21101	B	91B0378	AT
SCALE		SHEET 71.0	

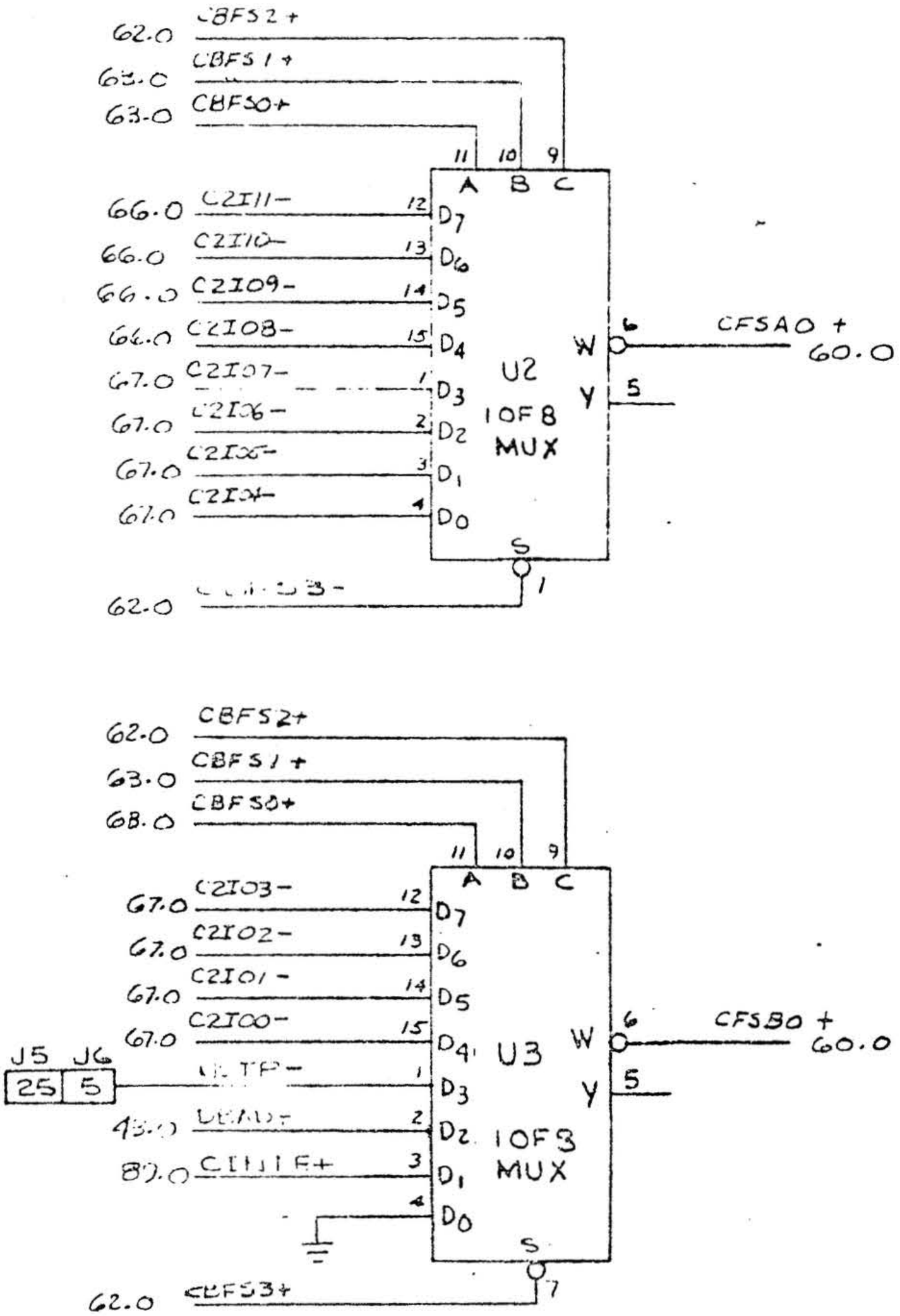

INSTRUCTION FIELD SELECTS

CODE IDENT NO.	SIZE	DWG NO	REV
21101	B	91B0378	AT
SCALE		SHEET 72	

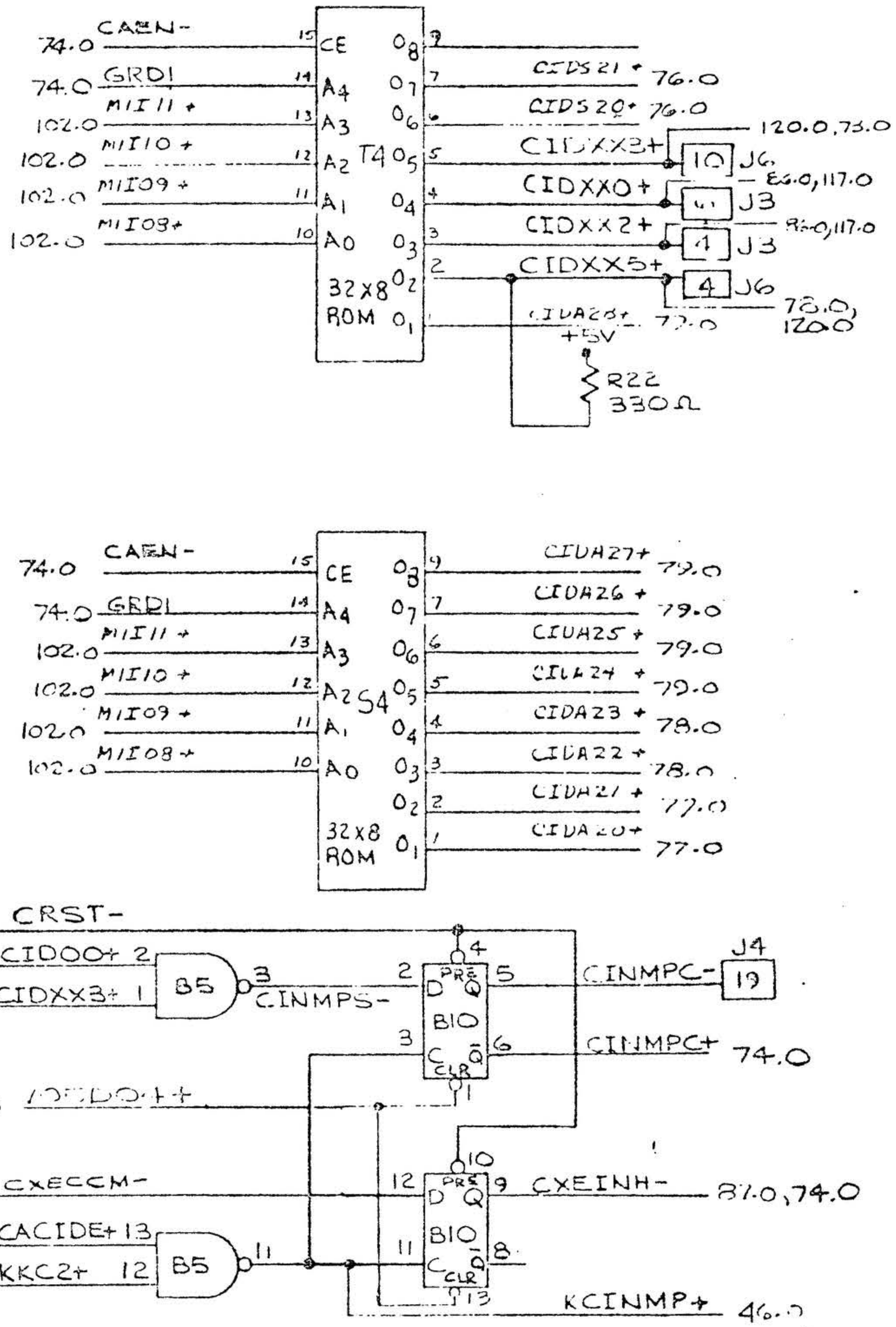

INSTRUCTION DECODER 11-8

CODE IDENT NO.	SIZE	DWG NO	REV
21101	B	91B0378	AT
SCALE			SHEET 73.0

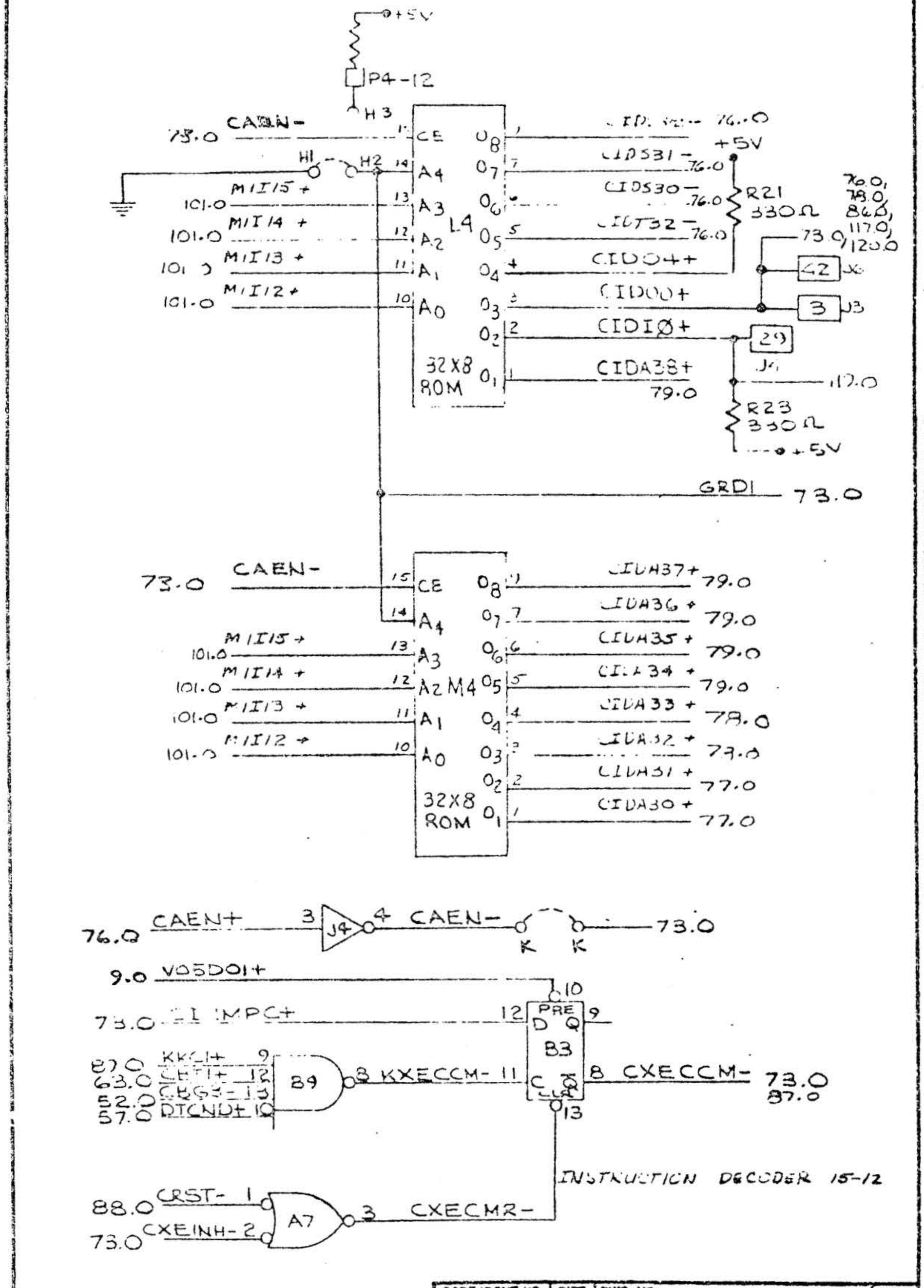
+5V
P4-12
H3
CAEN-
75.0
CE
HI
H2
A4
MII15+
101.0
A3
MII14+
101.0
A2
MII13+
101.0
A1
MII12+
101.0
A0
32X8 ROM
L4
O8
O7
O6
O5
O4
O3
O2
O1
CIDS31-
CIDS30-
CIDT32-
CIDO4+
CIDO0+
CIDI0+
CIDA38+
79.0
76.0
+5V
R21 330Ω
76.0, 78.0, 86.0, 117.0, 120.0
73.0
42
3
29
J4
110.0
R23 330Ω
+5V
GRDI
73.0
CAEN-
73.0
CIDA37+
79.0
CIDA36+
79.0
CIDA35+
79.0
CIDA34+
79.0
CIDA33+
78.0
CIDA32+
78.0
CIDA31+
77.0
CIDA30+
77.0
M4
J4
CAEN+
76.0
CAEN-
73.0
VD5D01+
9.0
MPC+
73.0
B3
PRE
D
Q
C
CLR
B9
KXECCM-
CXECCM-
73.0
87.0
INSTRUCTION DECODER 15-12
CRST-
88.0
CXEINH-2
73.0
A7
CXECMR-
CODE IDENT NO. 21101
SIZE B
DWG NO 91B0378
REV AT
SCALE
SHEET 79

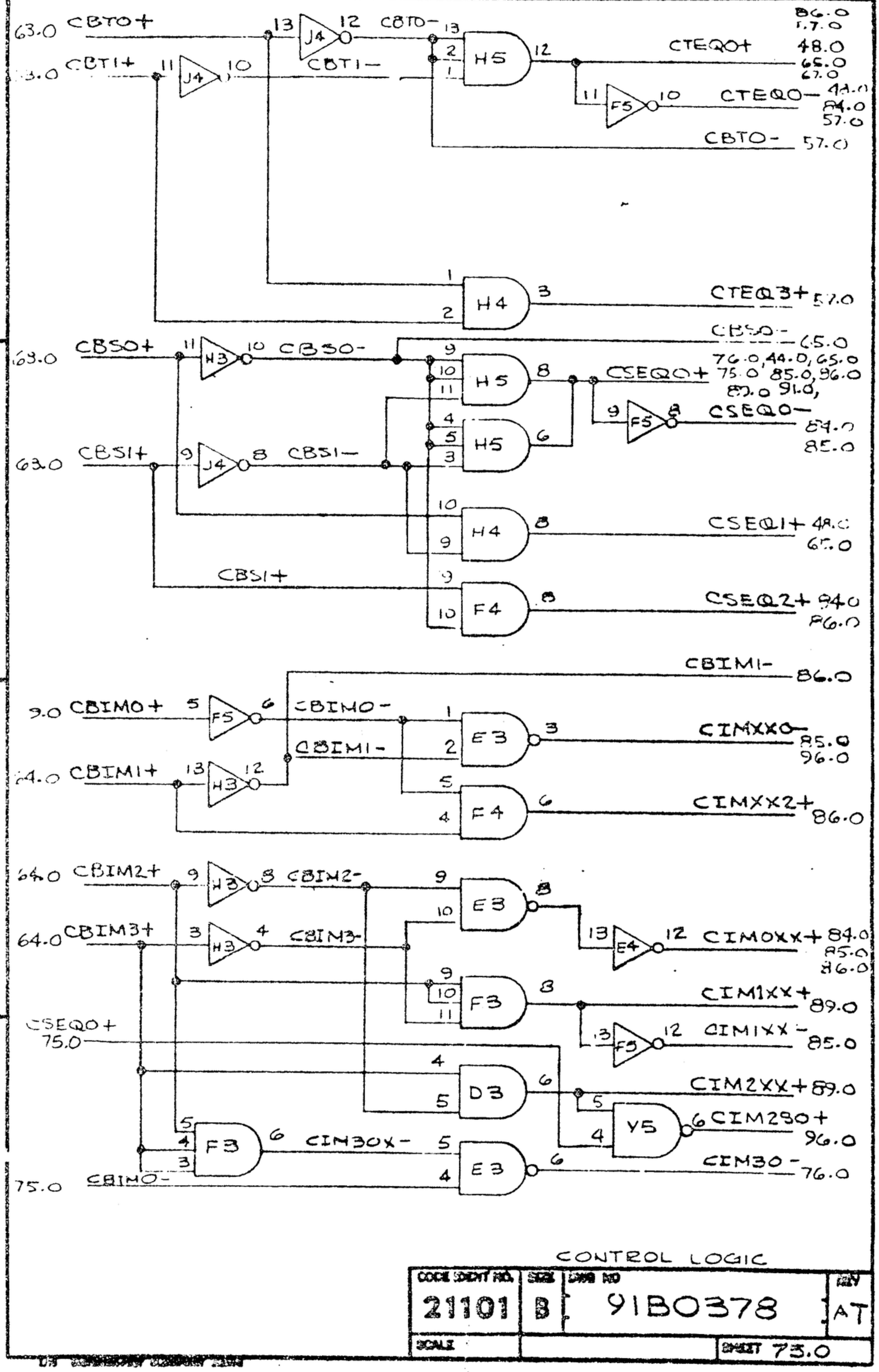
63.0 CBTO+
13
J4
12 CBTO-
13
2
1
H5
12
CTEQO+
48.0
65.0
67.0
B6.0
F7.0
11
F5
10
CTEQO-
44.0
84.0
57.0
CBTO-
57.0
63.0 CBT1+
11
J4
10
CBT1-
1
2
H4
3
CTEQ3+
57.0
CBSO-
65.0
63.0 CBSO+
11
H3
10 CBSO-
9
10
11
H5
8
CSEQO+
75.0 85.0, 96.0
87.0 91.0,
9
F5
8
CSEQO-
84.0
85.0
4
5
3
H5
6
62.0 CBS1+
9
J4
8 CBS1-
10
9
H4
8
CSEQ1+
48.0
65.0
CBS1+
9
10
F4
8
CSEQ2+
94.0
96.0
CBIM1-
86.0
9.0 CBIMO+
5
F5
6
CBIMO-
1
2
E3
3
CIMXXO-
85.0
96.0
64.0 CBIM1+
13
H3
12
CBIM1-
5
4
F4
6
CIMXX2+
86.0
64.0 CBIM2+
9
H3
8 CBIM2-
9
10
E3
8
64.0 CBIM3+
3
H3
4
CBIM3-
13
E4
12
CIMOXX+
84.0
85.0
86.0
9
10
11
F3
8
CIM1XX+
89.0
13
F5
12
CIM1XX-
85.0
CSEQO+
75.0
4
5
D3
6
CIM2XX+
89.0
5
4
Y5
6
CIM2SO+
96.0
5
4
3
F3
6
CIM3OX-
5
4
E3
6
CIM3O-
76.0
75.0
CBIMO-
CONTROL LOGIC
CODE IDENT NO.
21101
SIZE
B
DWG NO
91B0378
REV
AT
SCALE
SHEET 73.0

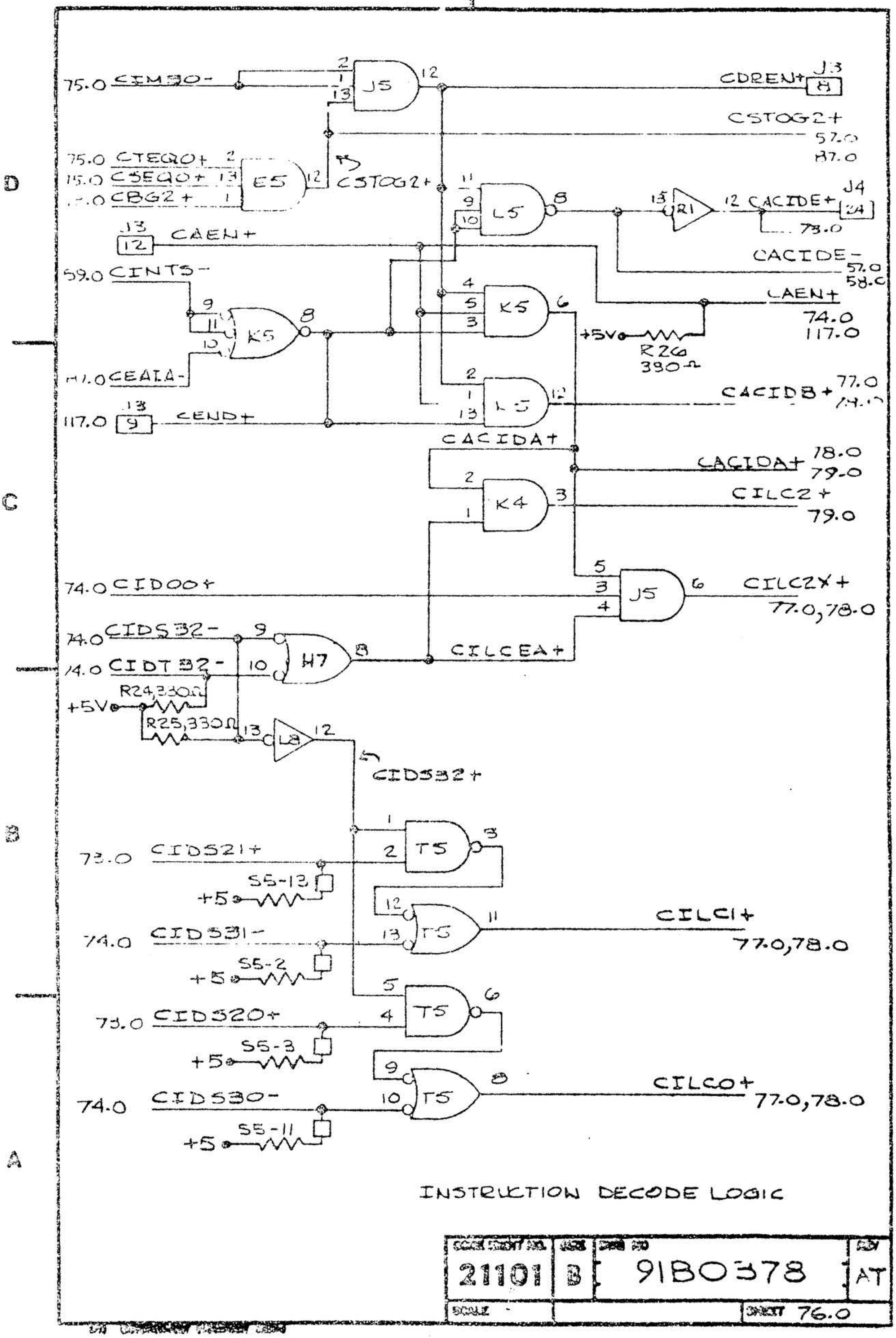

INSTRUCTION DECODE LOGIC

21101	B	91B0378	AT
SCALE -		SHEET 76.0	

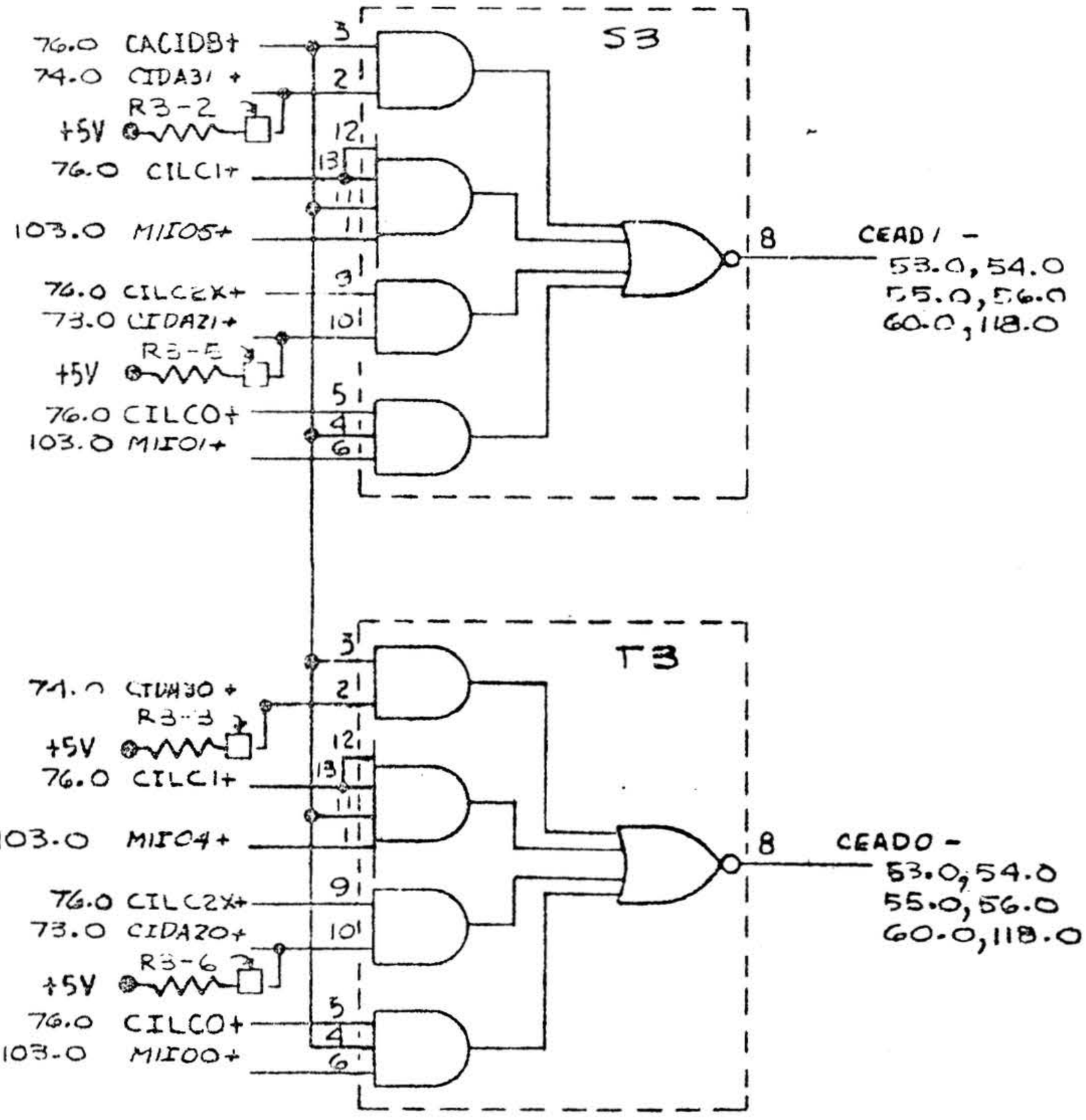

INSTRUCTION DECODE LOGIC

CODE IDENT NO.	SIZE	DWG NO	REV
21101	B	91B0378	AT
SCALE		SHEET 77.0	

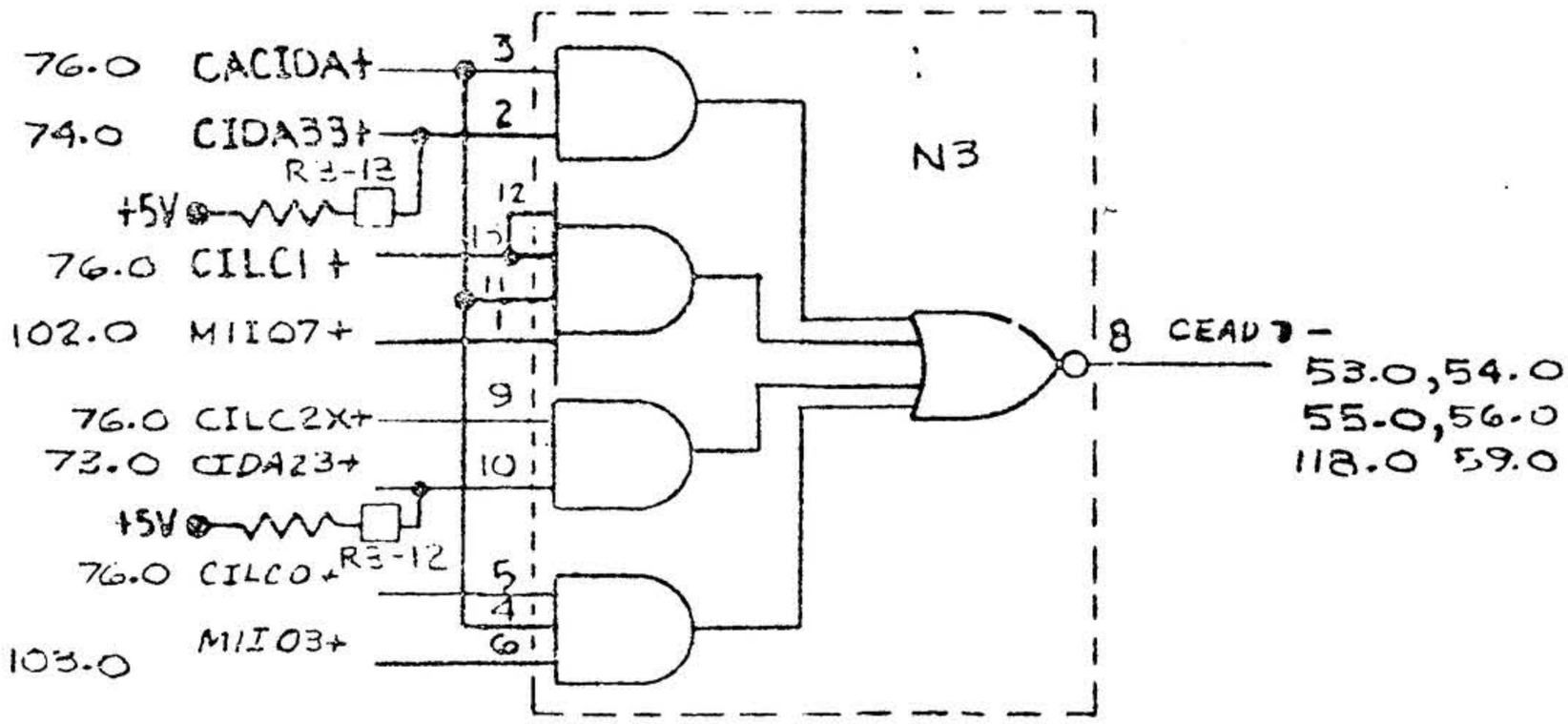

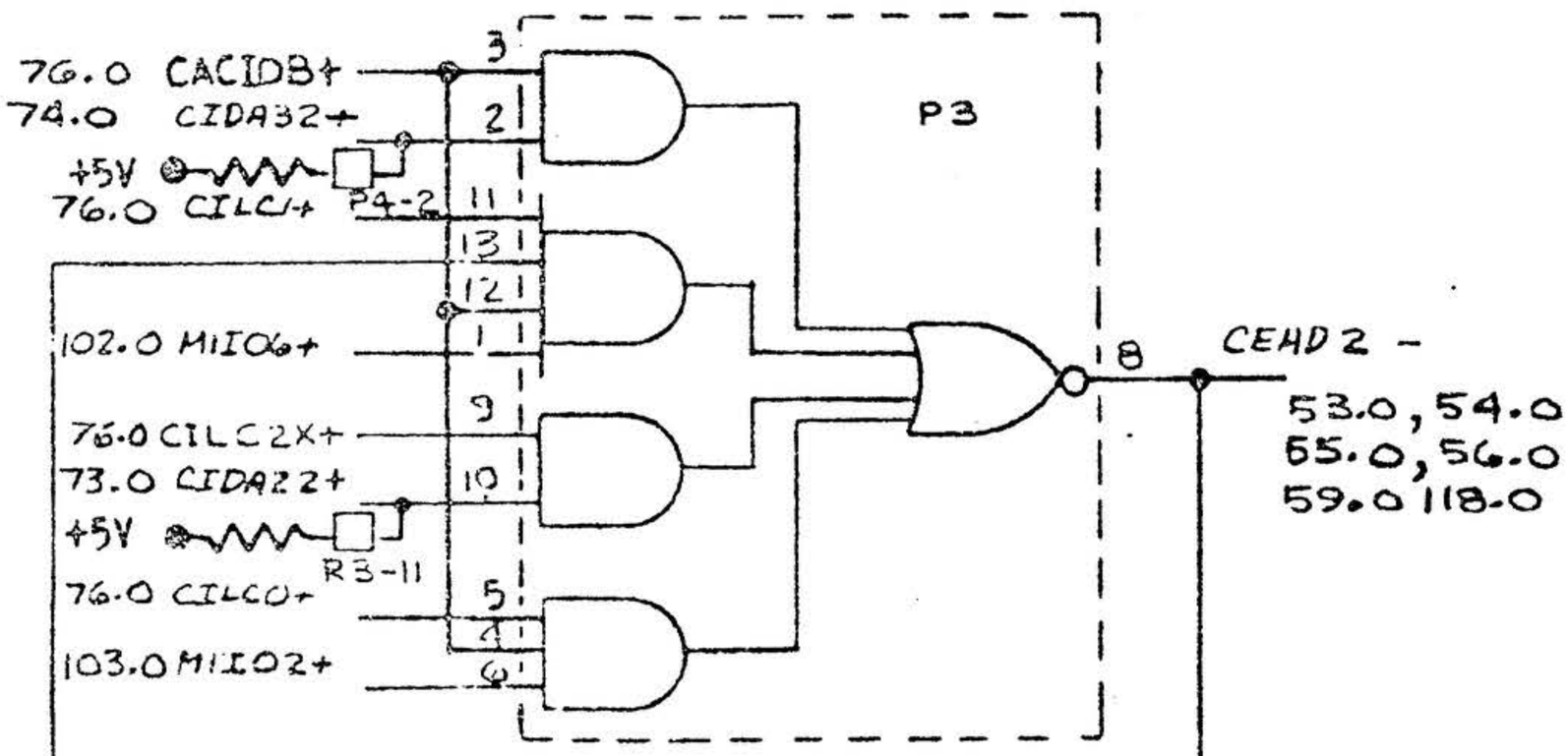

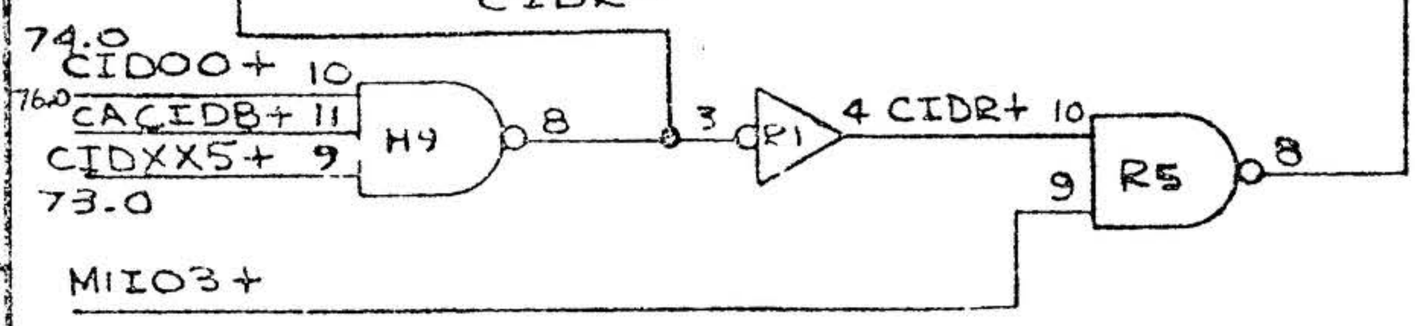

INSTRUCTION DECODE LOGIC

CODE IDENT NO.	SIZE	DWG NO	REV
21101	B	91B0378	AT
SCALE		SHEET 78.0	

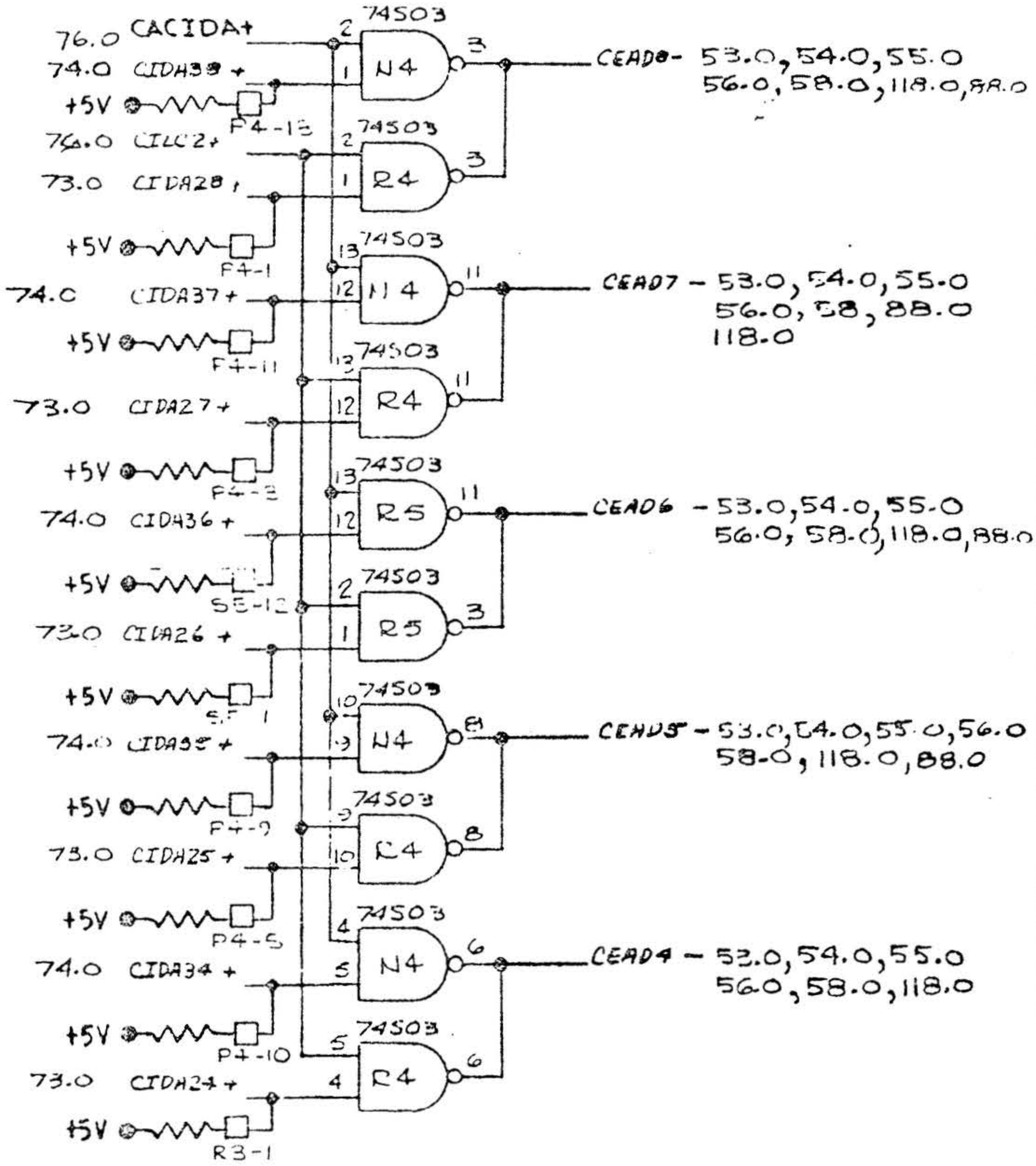

INSTRUCTION DECODE LOGIC

CODE IDENT NO.	SIZE	DWG NO	REV
21101	B	91B0378	AT
SCALE			SHEET 72 C

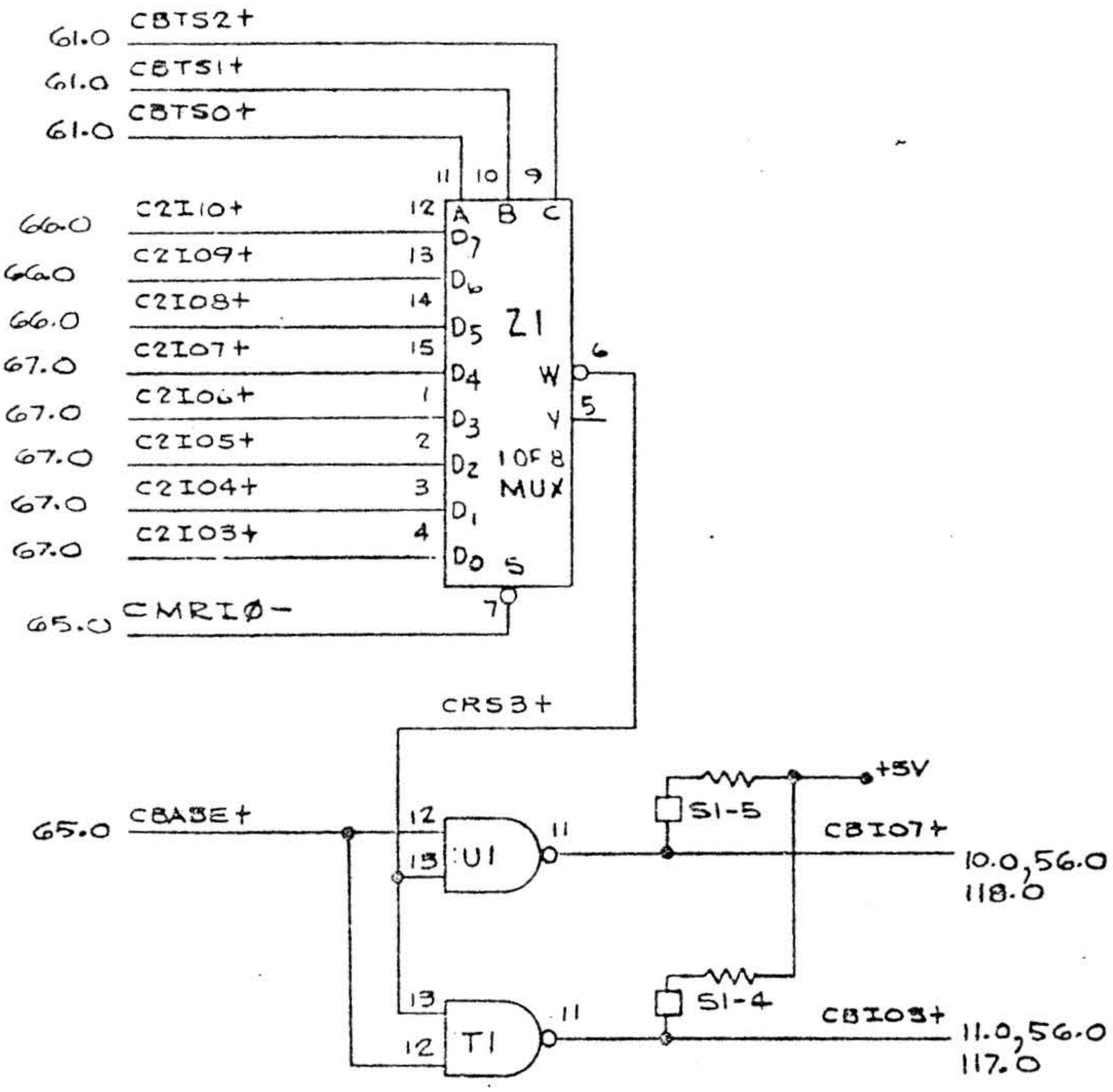

REGISTER FIELD SELECT 1

CODE IDENT NO.	SIZE	DWG NO	REV
21101	B	91B0378	AT
SCALE			SHEET 80.C

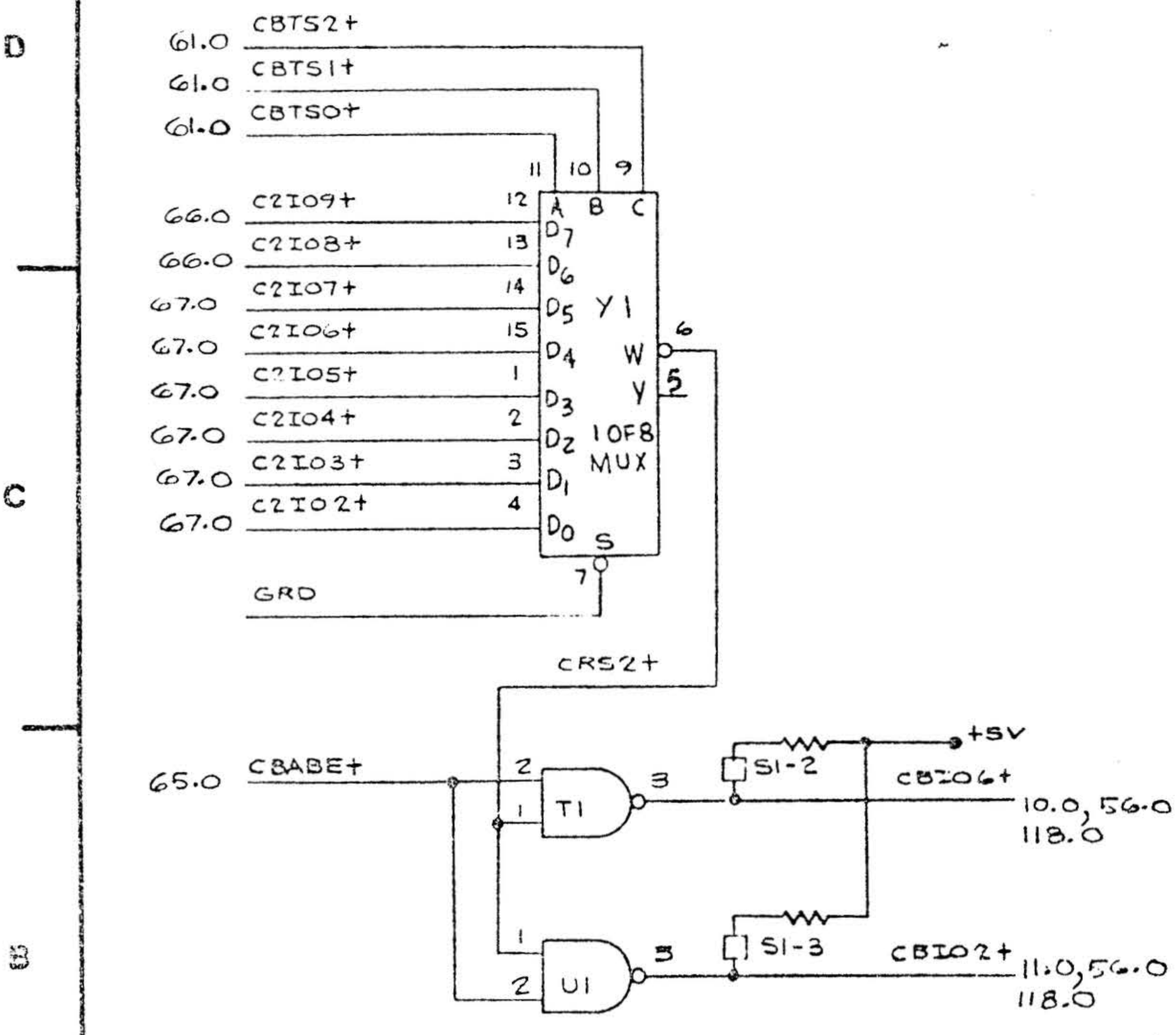

REGISTER FIELD SELECT 2

CCDE IDENT NO.	SIZE	DWG NO	REV
21101	B	91B0378	AT
SCALE		SHEET A1.0	

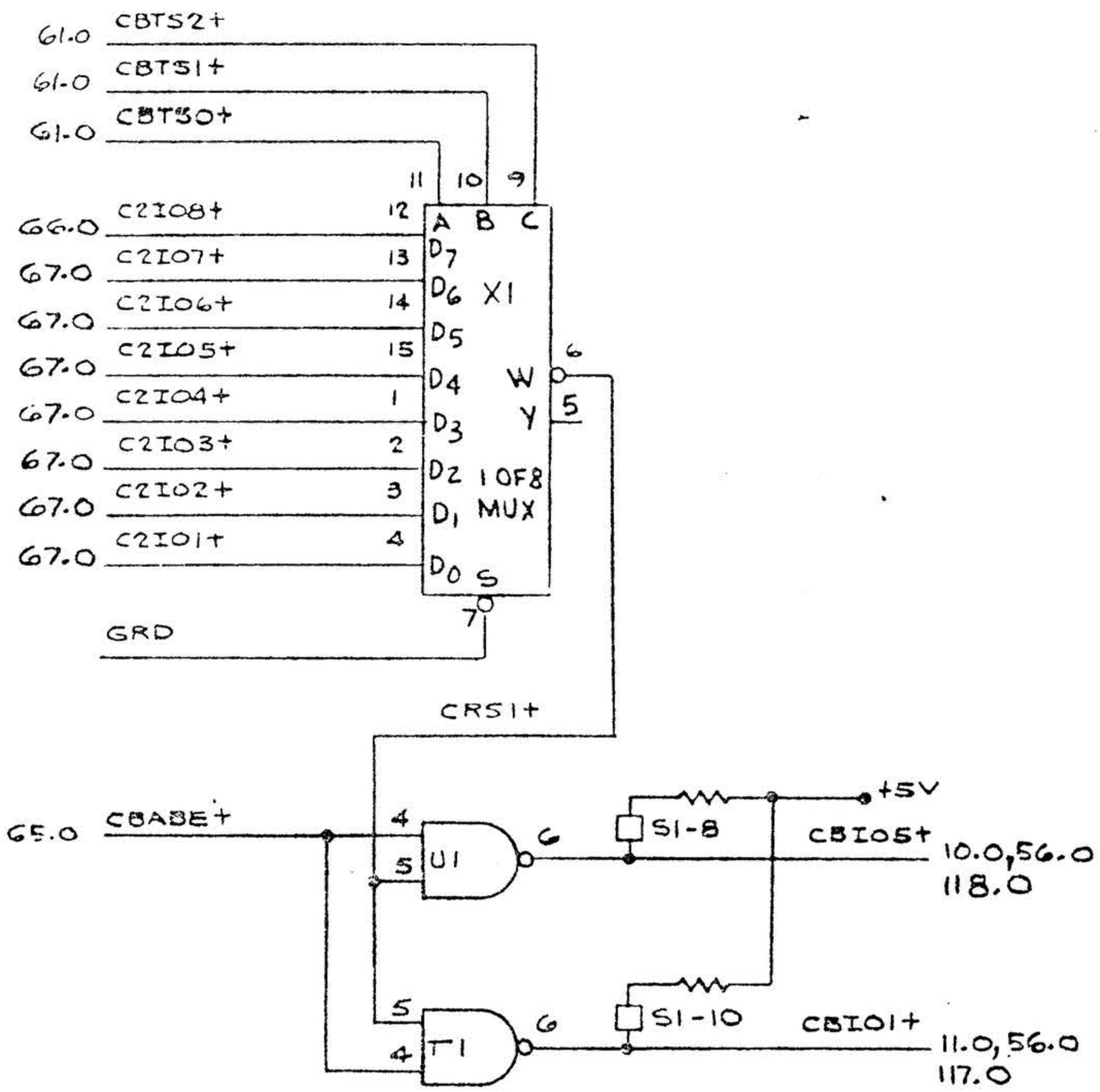

REGISTER FIELD SELECT 3

21101	B	91B0378	AT
SCALE		SHEET B2.0	

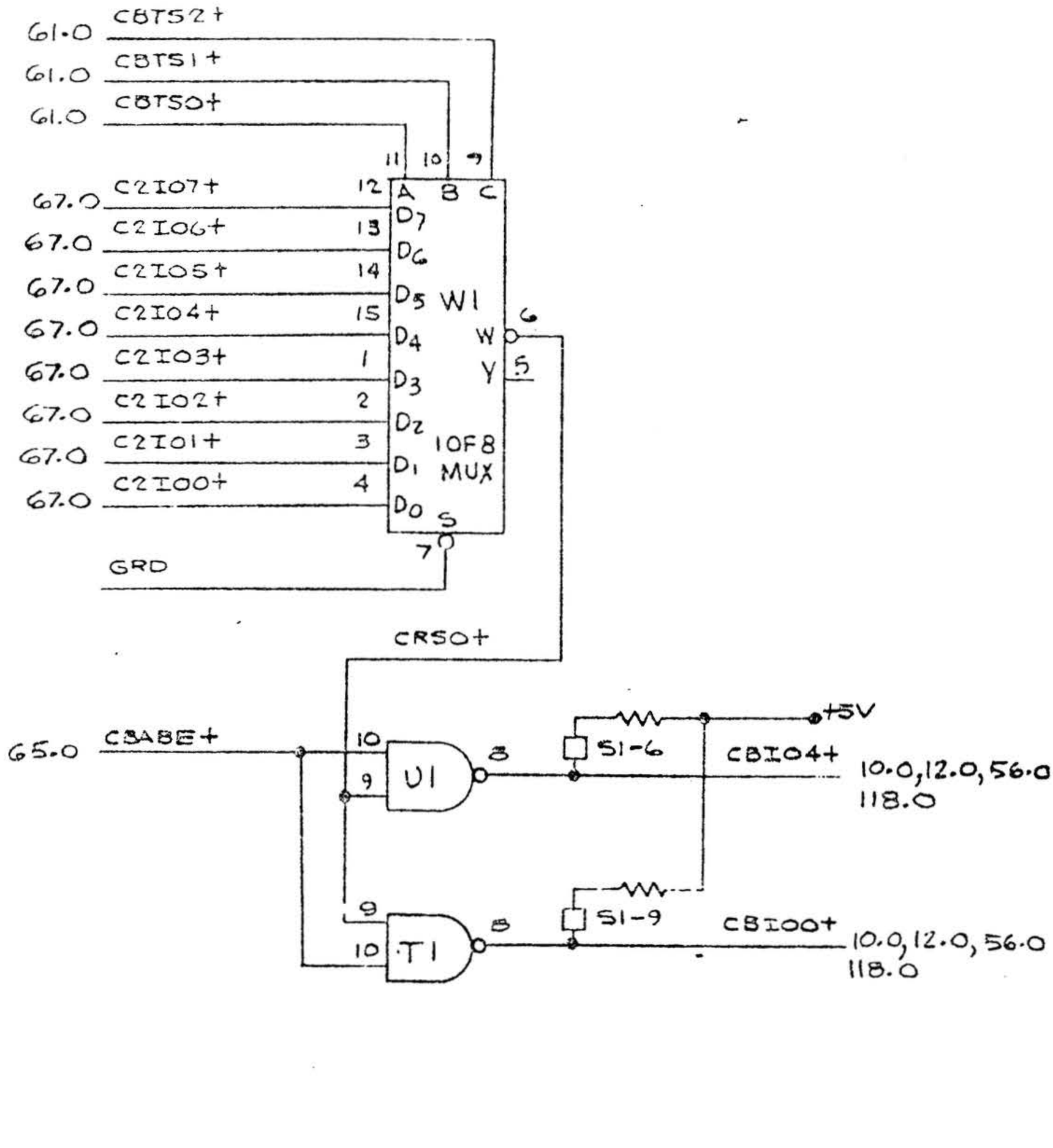

REGISTER FIELD SELECT 4

21101	B	9IB0378	AT
SCALE			SHEET 83.0

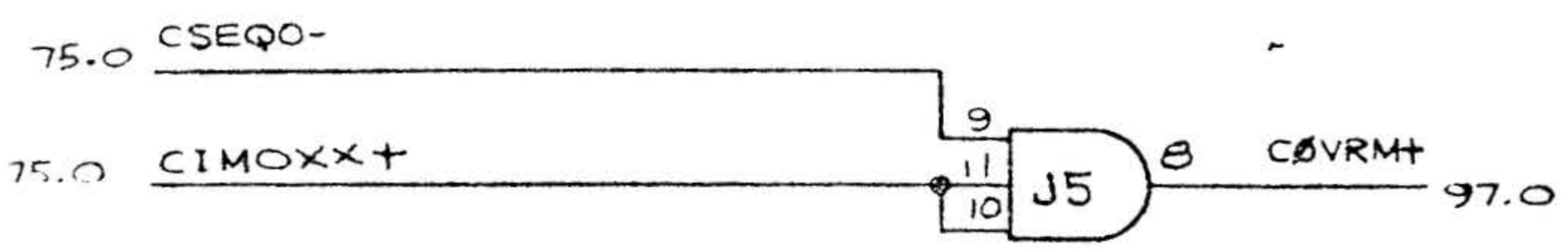

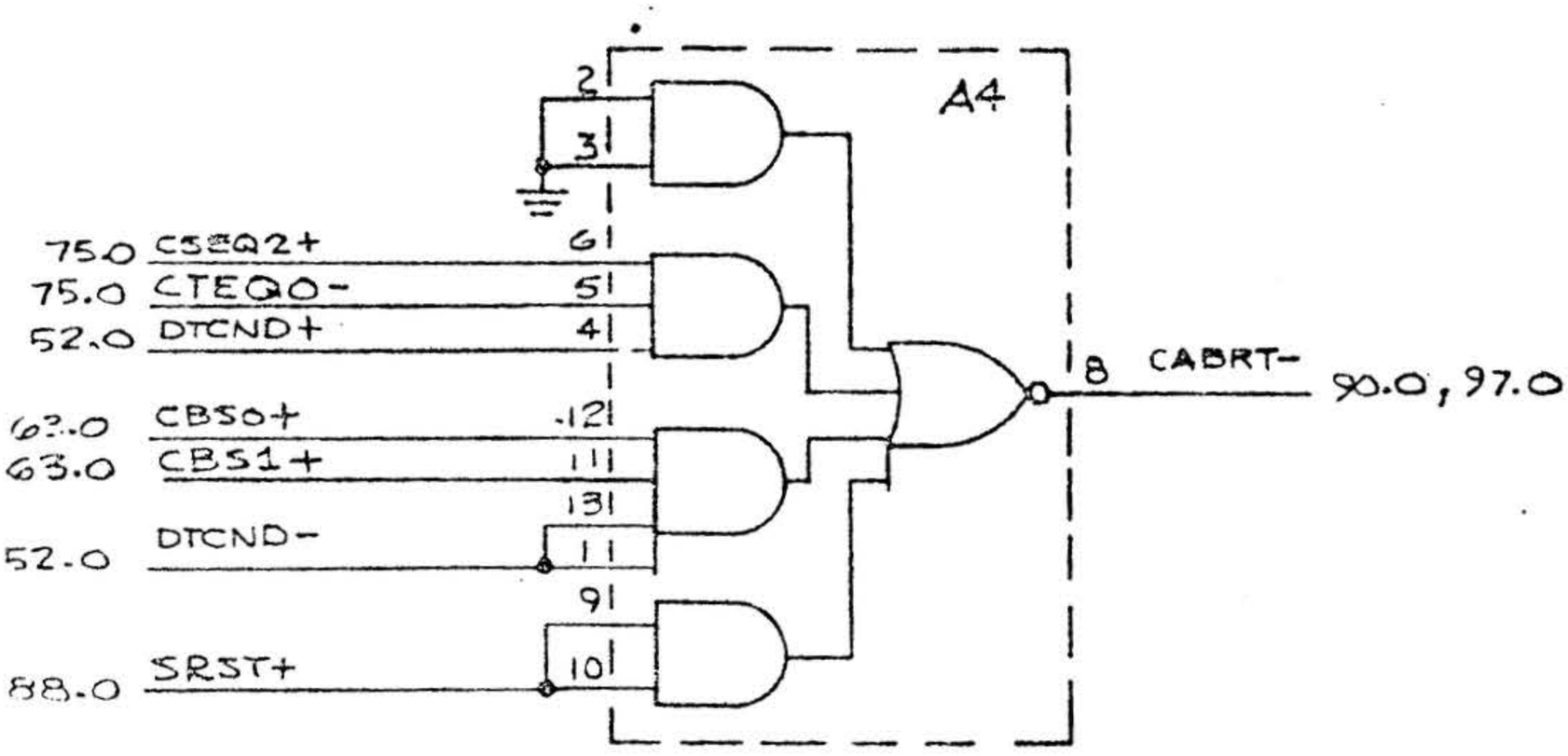

CONTROL MEMORY INTERFACE

CODE IDENT NO.	SIZE	DWG NO	REV
21101	B	91B0378	AT
SCALE		SHEET 84.0	

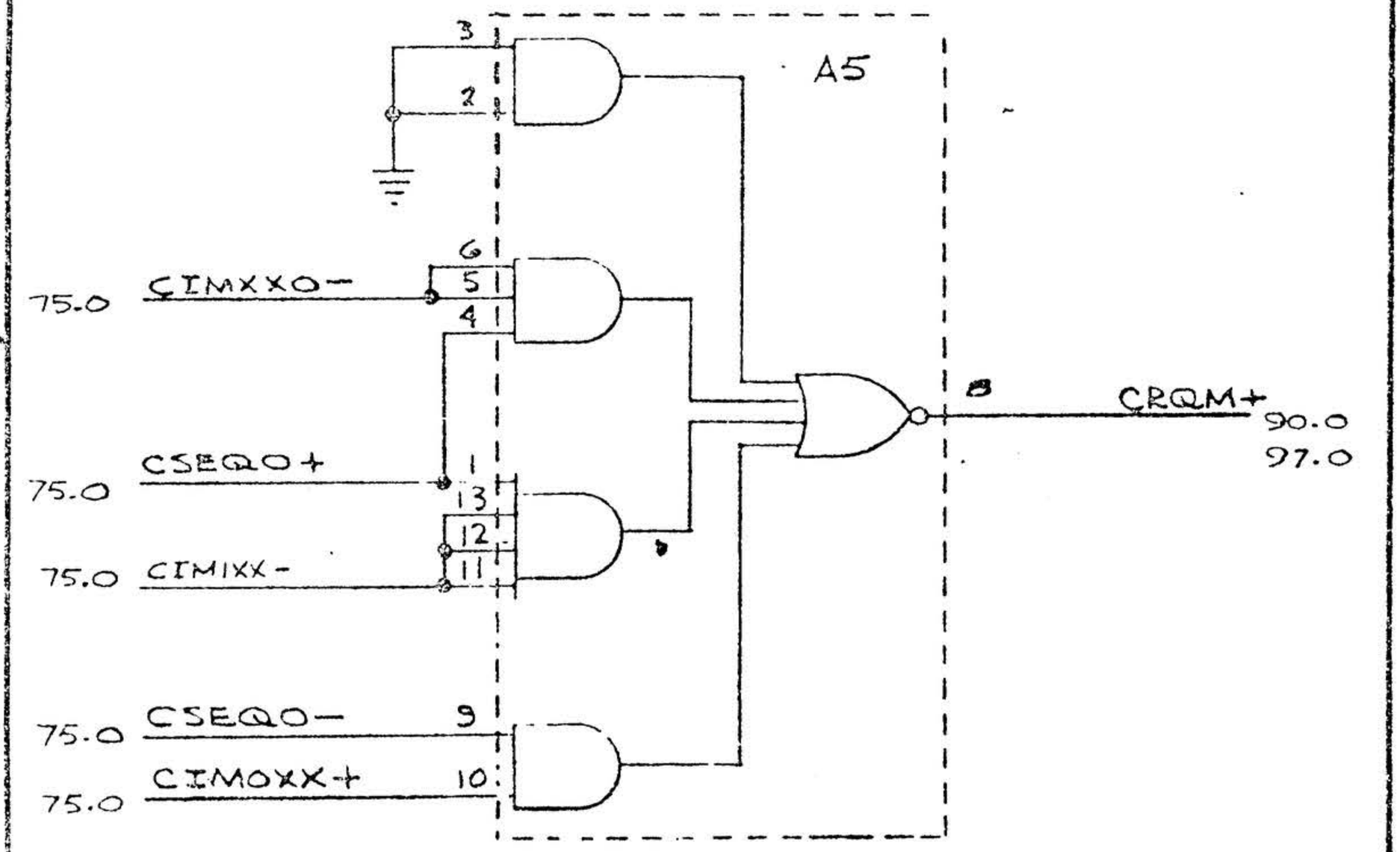

CONTROL/MEMORY INTERFACE

CODE IDENT NO.	SIZE	DWG NO	REV
21101	B	91B0378	AT
SCALE		SHEET 85.0	

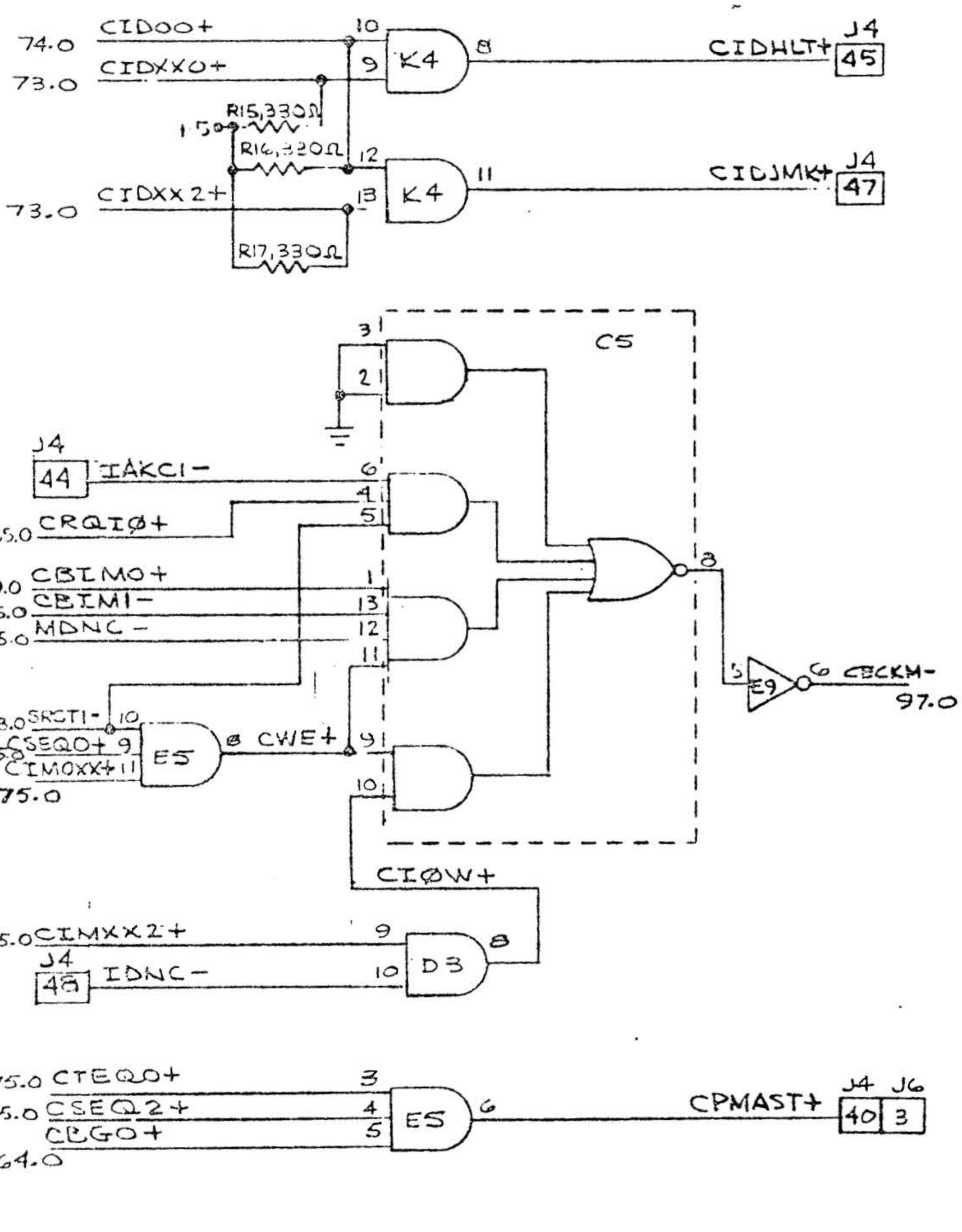
74.0 CIDOO+
73.0 CIDXXO+
10
9
K4
8
CIDHLT+
J4
45
R15,330Ω
1.5
R16,330Ω
12
11
CIDJMK+
J4
47
73.0 CIDXX2+
13
K4
73.0
R17,330Ω
C5
3
2
J4
44
IAKCI-
6
4
5
65.0 CRQIØ+
9.0 CBIMO+
15.0 CBIMI-
35.0 MDNC-
1
13
12
11
8
5
E9
6 CBCKM-
97.0
38.0 SRCTI-
10
75.0 CSEQO+ 9
CIMOXX+ 11
75.0
E5
6 CWE+
9
10
CIØW+
75.0 CIMXX2+
9
J4
48
IDNC-
10
D3
8
75.0 CTEQO+
3
75.0 CSEQ2+
4
CBGO+
5
64.0
E8
6
CPMAST+
J4 40
J6 3
CONTROL/MEMORY INTERFACE
CODE IDENT NO. 21101
SIZE B
DWG NO 91B0378
REV AT
SCALE
SHEET 86.0

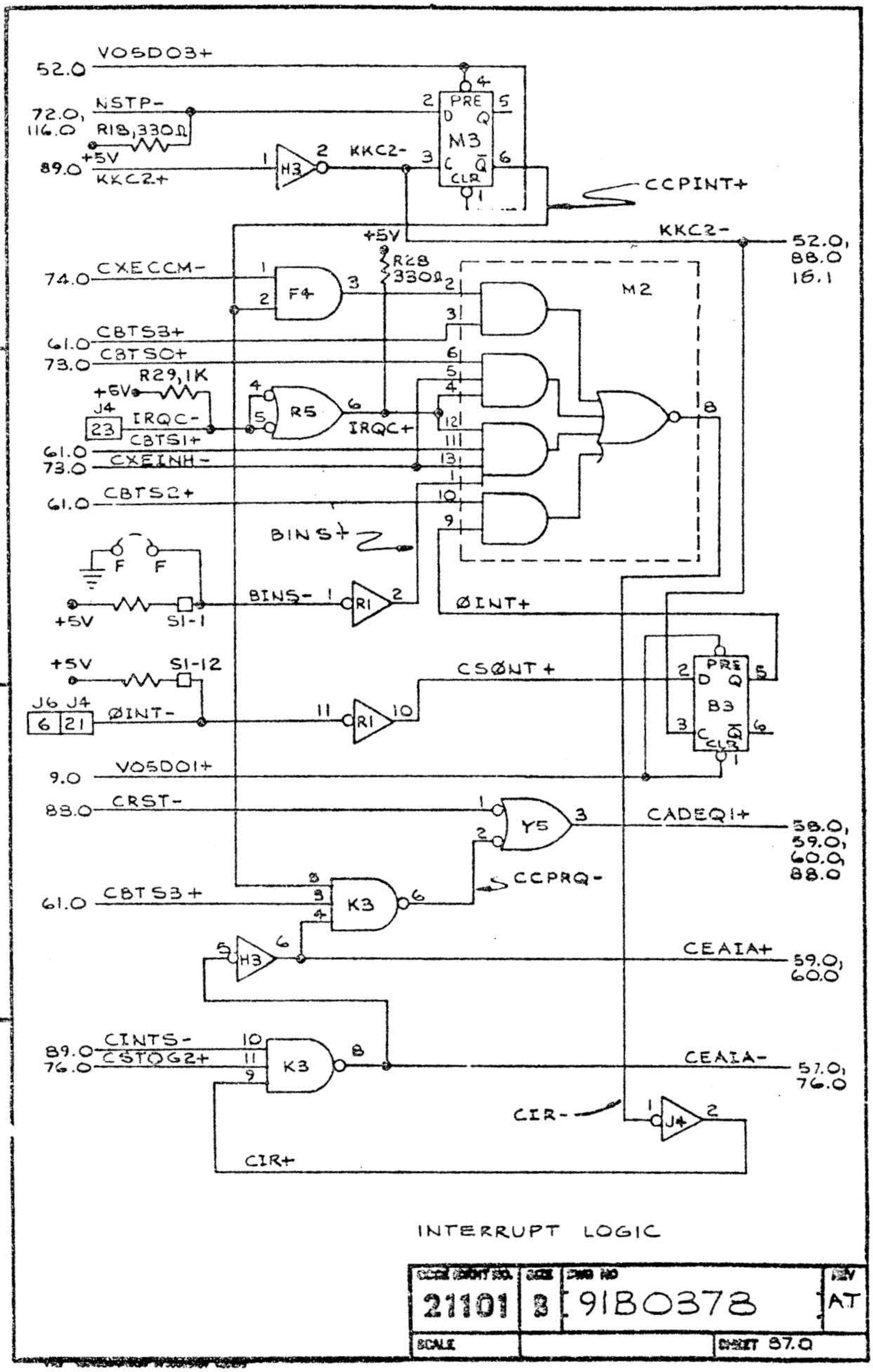
VOSDO3+
52.0
NSTP-
72.0, 116.0
R18, 330Ω
+5V
89.0
KKC2+
H3
KKC2-
PRE
M3
CLR
CCPINT+
+5V
KKC2-
52.0, 88.0 16.1
R28 330Ω
CXECCM-
74.0
F4
M2
CBTS3+
61.0
CBTSO+
73.0
R29, 1K
+6V
J4
23
IRQC-
CBTS1+
R5
IRQC+
61.0
CXEINH-
73.0
CBTS2+
61.0
BINS+
F F
+5V
S1-1
BINS-
R1
ØINT+
+5V
S1-12
J6 J4
6 21
ØINT-
CSØNT+
B3
VOSDO1+
9.0
CRST-
88.0
Y5
CADEQ1+
58.0, 59.0, 60.0 88.0
CCPRQ-
CBTS3+
61.0
K3
CEAIA+
59.0, 60.0
CINTS-
89.0
CSTOG2+
76.0
K3
CEAIA-
57.0, 76.0
CIR-
J4
CIR+
INTERRUPT LOGIC
21101
B
91B0378
AT
SCALE
SHEET 87.0

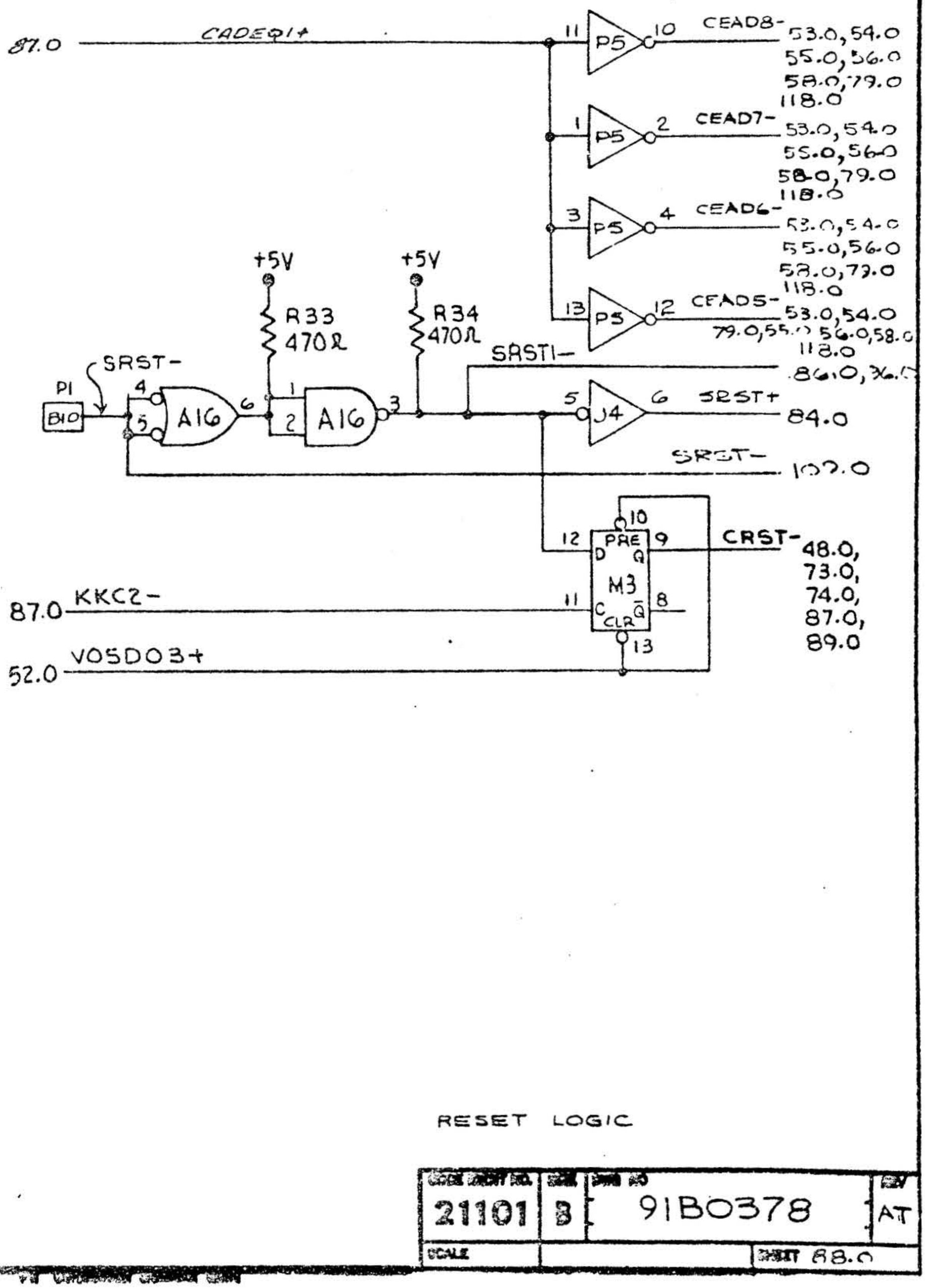

RESET LOGIC

21101	B	91B0378	AT
SCALE		SHEET 88.0	

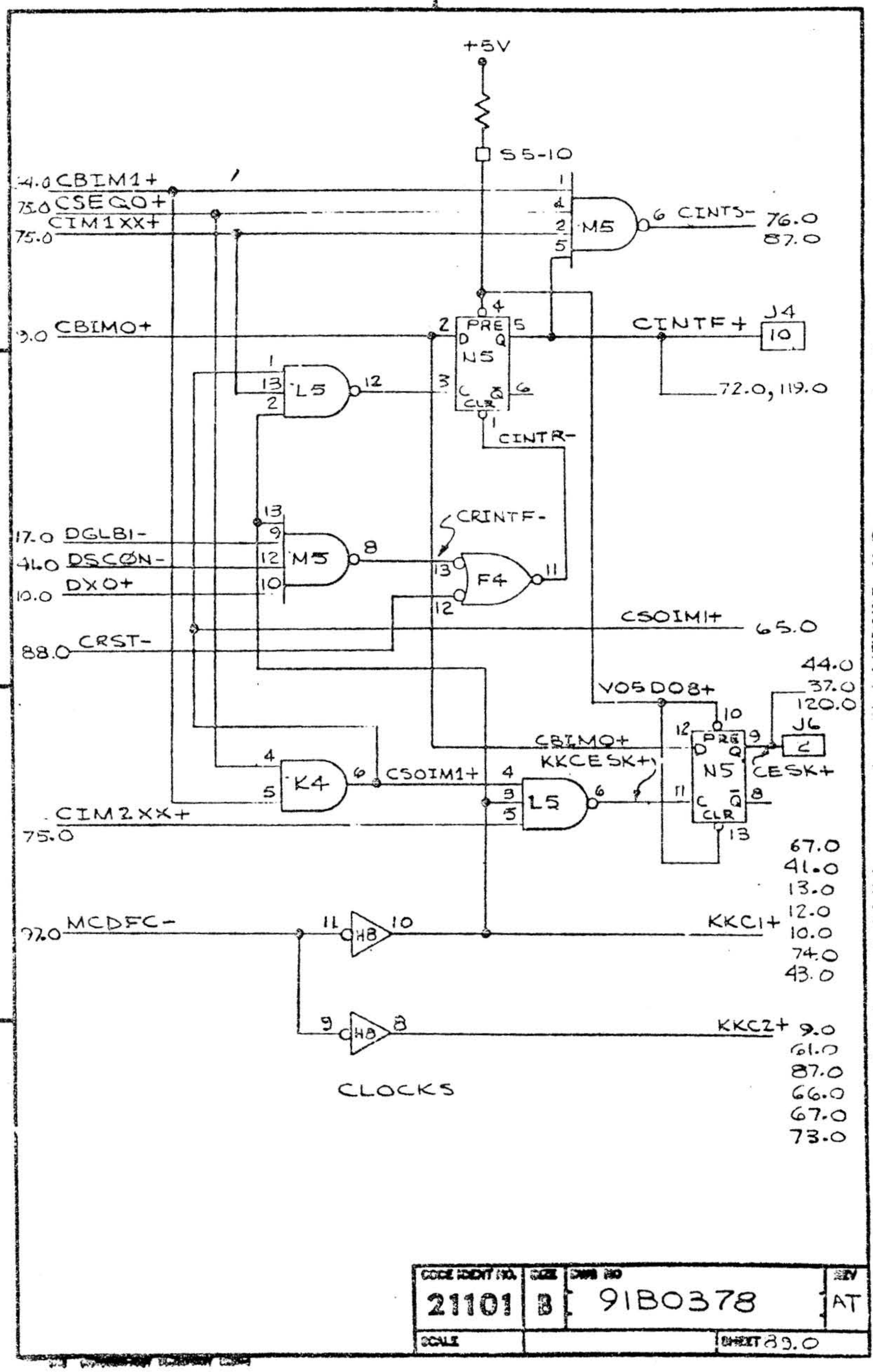
+5V
S5-10
14.0 CBIM1+
75.0 CSEQ0+
CIM1XX+
75.0
M5
6 CINTS-
76.0
87.0
CBIMO+
2
PRE
D
Q
N5
C
CLR
CINTF+
J4
10
72.0, 119.0
L5
CINTR-
CRINTF-
17.0 DGLBI-
41.0 DSCØN-
10.0 DXO+
F4
CSOIM1+
65.0
88.0 CRST-
44.0
37.0
120.0
VO5DO8+
J6
CBIMO+
KKCESK+)
CESK+
K4
CSOIM1+
CIM2XX+
75.0
67.0
41.0
13.0
12.0
10.0
74.0
43.0
77.0 MCDFC-
HB
KKC1+
KKCZ+
9.0
61.0
87.0
66.0
67.0
73.0
CLOCKS
CODE IDENT NO.
21101
SIZE
B
DWG NO
91B0378
REV
AT
SCALE
SHEET 89.0

2 1

D

C

B

A

MRQSCA-

97.0 VO5D15+

+5V

330Ω

D13-2

119.0

J4 41 ØRQM-

11 J1 15 10

PRE 10

J 11 Q 9

13 D15

K 12 CLR Q̄ 7

14

9 E15 8

MAKØ+ J4 43

119.0

MIRA- 91.0

MIRAB+ 48 120.0 J06

13 A15 12

MRST- 96.0

97.0 VO5D15+

MIRP+ 90.0

IRQM+ 95.0

5 4 B14 6

PRE 4

2 D 5 Q E16

3 C 6 Q̄ CLR

1

PRE 10

12 D 9 Q F16

11 C 8 Q̄ CLR

13

94.0,95.0 100.0 90.0, MIRB+ 92.0

MRQSC-

IRQM- 95.0 119.0

1 2 B14 3

MCRP- 97.0

84.0 CABRT-

CRQM+ 85.0

3 4 5 J14 6

PRE 10

12 D 9 Q E16

11 C 8 Q̄ CLR

13

PRE 4

2 D 5 Q F16

3 C 6 Q̄ CLR

1

MRCA+

8 B J4 49 97.0

119.0 95.0 94.0 92.0 MCRB+

MCRA- 91.0

VO5D15+

91.0 MRS2- 11 9 10 K14 8 MRQSC+

96.0 MFCA+

5 E15 6

9 A13 8 MCRP+ 92.0 94.0 97.0

4 5 H15 6

MRQSC+ 91.0

90.0 MIRP+ 10

90.0 MIRB+ 9 A10 8 MIRPB+ 13

91.0 MRS2+ 12 A10 11 MAKIØ+ J4 37 119.0

CODE IDENT. NO. 21101	SIZE B	DWG NO 91B0378	REV AT
SCALE		SHEET 90.0	

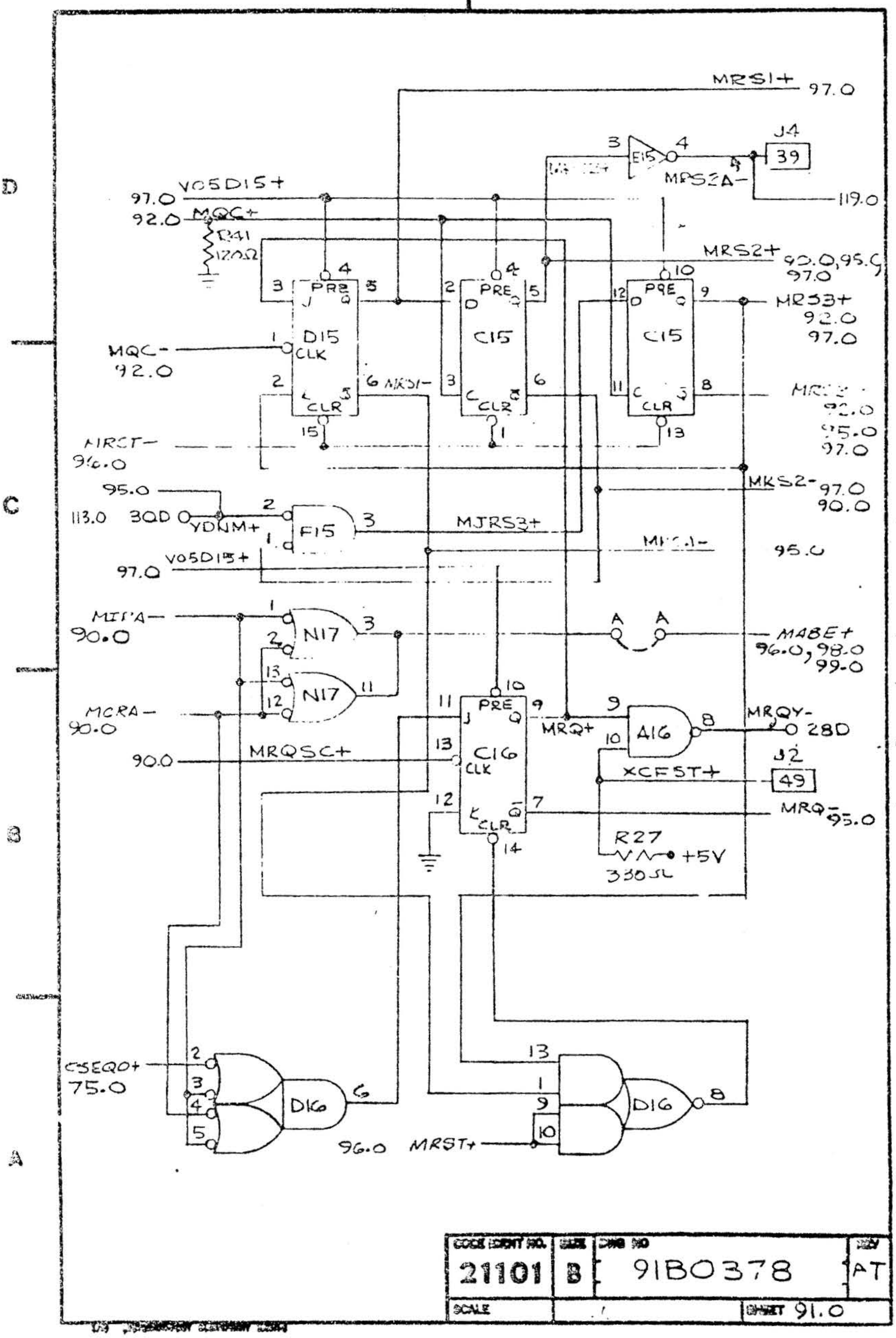
MRS1+ 97.0
J4
39
E15
MRS2A-
119.0
VO5D15+
97.0
MQC+
92.0
R41
120Ω
MRS2+ 90.0,95.0 97.0
MRS3+ 92.0 97.0
D15
C15
C15
PRE
CLR
CLK
MQC-
92.0
MRST-
90.0
MKS2- 97.0 90.0
95.0
YDNM+
113.0 30D
F15
MJRS3+
VO5D15+
97.0
MI'A-
90.0
N17
N17
MABE+ 96.0,98.0 99.0
MCRA-
90.0
MRQSC+
90.0
C16
MRQ+
A16
MRQY- 28D
XCFST+
J2
49
MRQ- 95.0
R27
330Ω
+5V
CSEQ0+
75.0
D16
96.0 MRST+
D16
CODE IDENT NO. 21101
SIZE B
DWG NO 91B0378
REV AT
SCALE
SHEET 91.0

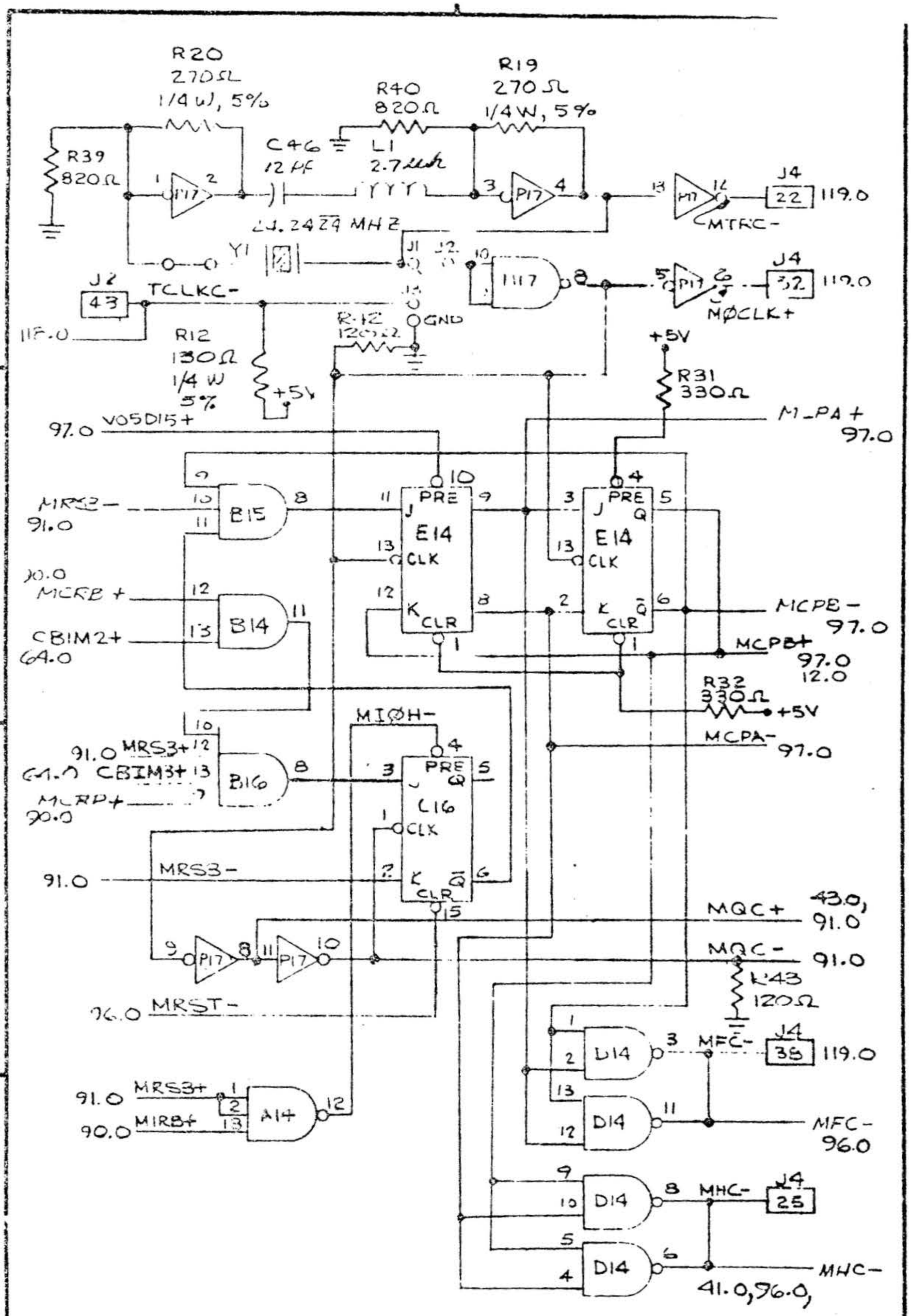

DRAWING IDENT NO.	SIZE	DWG NO	REV
21101	B	91B0378	AT
SCALE		SHEET 92.0	

R6 330Ω

+5V

V05D09+

W17 — 4-BIT MAGNITUDE COMPARATOR

98.0 MYA04+	10	A0
45.0 DPR04+	9	B0
98.0 MYA05+	12	A1
45.0 DPR05+	11	B1
99.0 MYA12+	14	B2
45.0 DPR12+	13	A2
99.0 MYA13+	1	B3
45.0 DPR13+	15	A3

W17 pins 2, 3, 4: A<B, A=B, A>B

W17 pin 5: A>B

W17 pin 6: A=B

W17 pin 7: A<B

Y17 — 4-BIT MAGNITUDE COMPARATOR

98.0 MYA06+	10	A0
45.0 DPR06+	9	B0
98.0 MYA07+	12	A1
45.0 DPR07+	11	B1
99.0 MYA14+	14	B2
45.0 DPR14+	13	A2
98.0 MYA15+	1	B3
45.0 DPR15+	15	A3

Y17 pins 2, 3, 4: A<B, A=B, A>B

Y17 pin 5: A>B

Y17 pin 6: A=B

Y17 pin 7: A<B

S17 — 4-BIT MAGNITUDE COMPARATOR

98.0 MYA00+	10	A0
45.0 DPR00+	9	B0
98.0 MYA01+	12	A1
45.0 DPR01+	11	B1
99.0 MYA08+	14	B2
45.0 DPR08+	13	A2
45.0 DPR09+	1	B3
99.0 MYA09+	15	A3

S17 pins 2, 3, 4: A<B, A=B, A>B

S17 pin 5: A>B

S17 pin 6: A=B

S17 pin 7: A<B

T17 — 4-BIT MAGNITUDE COMPARATOR

98.0 MYA02+	10	A0
45.0 DPR02+	9	B0
98.0 MYA03+	12	A1
45.0 DPR03+	11	B1
99.0 MYA10+	14	B2
45.0 DPR10+	13	A2
99.0 MYA11+	1	B3
45.0 DPR11+	15	A3

T17 pins 2, 3, 4: A<B, A=B, A>B

T17 pin 5: A>B

T17 pin 6: A=B

T17 pin 7: A<B

U17 — pins 10, 2, 13; output 8

K16 — pins 10, 2, 11; output 9

MPLE+ 95.0

97.0 MCDFCA+

96.0 MRST-

* PAIR MLLXX AND DPRXX LINES TO A & B INPUTS OF 7485

CODE IDENT NO. 21101	SIZE B	DWG NO 9180373	REV AT
SCALE		SHEET 23 OF	

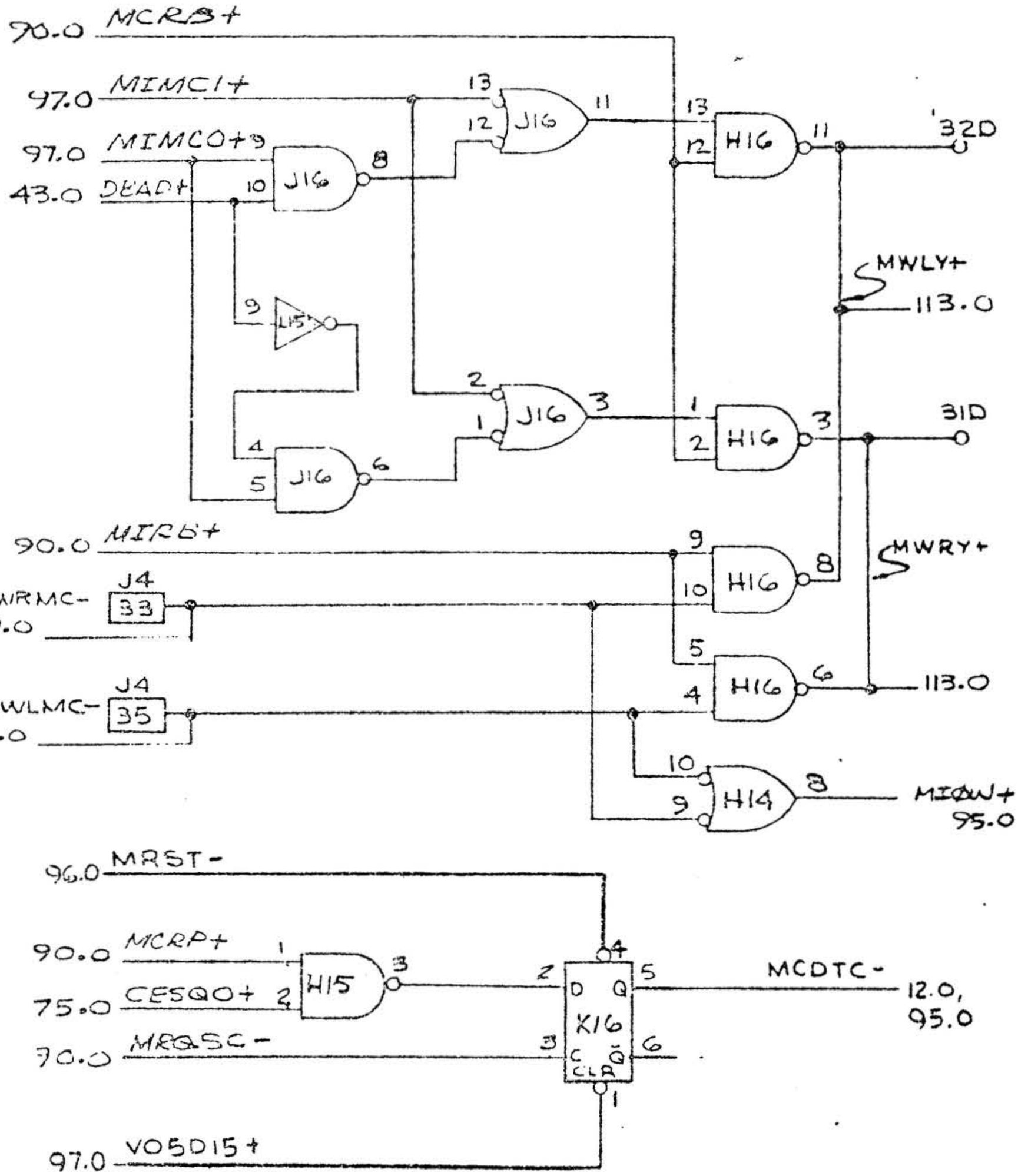

MEM CONT WRT DRIVERS

21101	B	91B0378	AT
SCALE		SHEET 94.0	

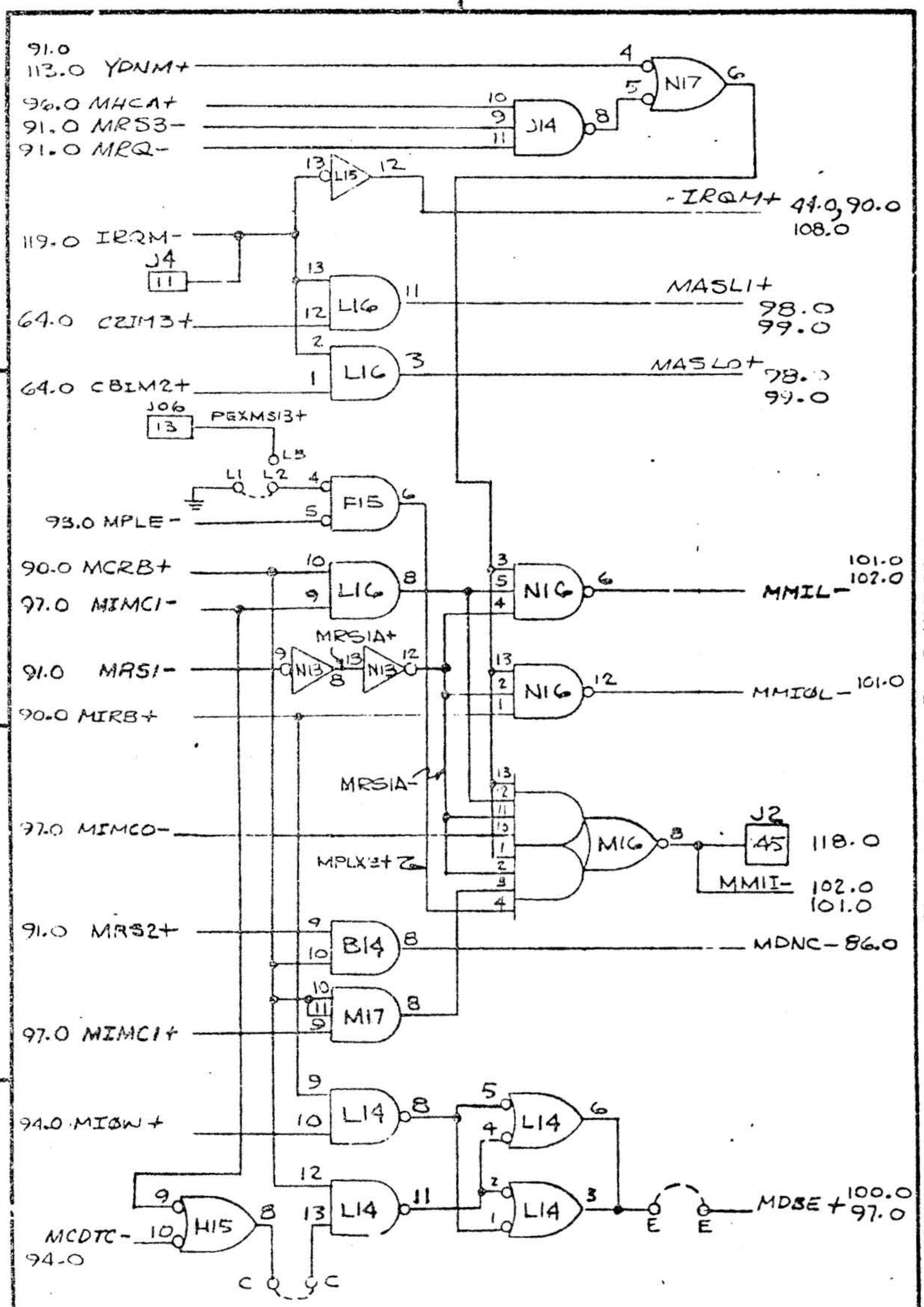
91.0
113.0 YDNM+
96.0 MHCAT+
91.0 MRS3-
91.0 MRQ-
N17
J14
L15
-IRQM+ 44.0, 90.0 108.0
119.0 IRQM-
J4
11
MASLI+ 98.0 99.0
64.0 CZIM3+
L16
64.0 CBIM2+
MASLO+ 98.0 99.0
J06
13
PGXMS13+
L3
L1
L2
F15
93.0 MPLE-
90.0 MCRB+
97.0 MIMCI-
L16
N16
101.0 102.0
MMIL-
MRS1A+
N13
91.0 MRS1-
90.0 MIRB+
MMIOL- 101.0
MRS1A-
97.0 MIMCO-
MPLX3+2
M16
J2
45
118.0
MMII- 102.0 101.0
91.0 MRS2+
B14
MDNC-86.0
M17
97.0 MIMC1+
94.0 MIOW+
L14
MCDTC-
94-0
H15
MDBE+ 100.0 97.0
MEM CONT LOGIC #1
21101
B
91B0378
AT
SHEET 95.0

44.0 DCK15+
44.0 DCK14+
44.0 DCK13+
91.0 MABE+
75.0 CIMXXO-
75.0 CIM25O-
R3 330Ω +5V
R4 330Ω +5V
R13 330Ω +5V
IN IN CLR DIS DIS
Z17
OUT OUT DIS DIS
DAL15+
DAL14+
DAL13+
DAL12+
DASCK-
BUS OR ABLE QUAD D FLIP-FLOP
R14 330Ω +3V
95.0 IRQM-
44.0 DCK12+
98.0 MAMO6+
98.0 MAMO7+
99.0 MAM15+
99.0 MAM14+
90.0 MRQSCA-
PART OF 6 BIT LATCH
41.0 MLL17-
41.0 MLL16-
Y16
X17
Z16
5 X17 6 MYK19+ 112.0 26D
1 X17 3 MYA18+ 112.0 25D
MLLO6- 98.0
MLLO7- 98.0
MLL14- 99.0
12 X17 11 MYK17+ 112.0 24D
9 X17 8 MYK16+ 112.0 23D
4 Z16 6 MYA15+ 112.0 22B
93.0
MLL15- 43.0

92.0 MFC- A15
MFCA- 97.0 108.0
MFCA+ 90.0 97.0

86.0 SRSTI- A15 U17
92.0 90.0 91.0 93.0 94.0 97.0
MRST- 91.0
MRST+ 91.0

92.0 MHC- A15 A15
MHCA- 97.0
MHCA+ 25.0 108.0
MEM CONT MEMORY KEY

13 BUS OR ABLE QUAD 'D' FLIP-FLOP

CODE IDENT NO.	SIZE	DWG NO	REV
21101	B	91B0378	AT
SCALE		SHEET 96.0	

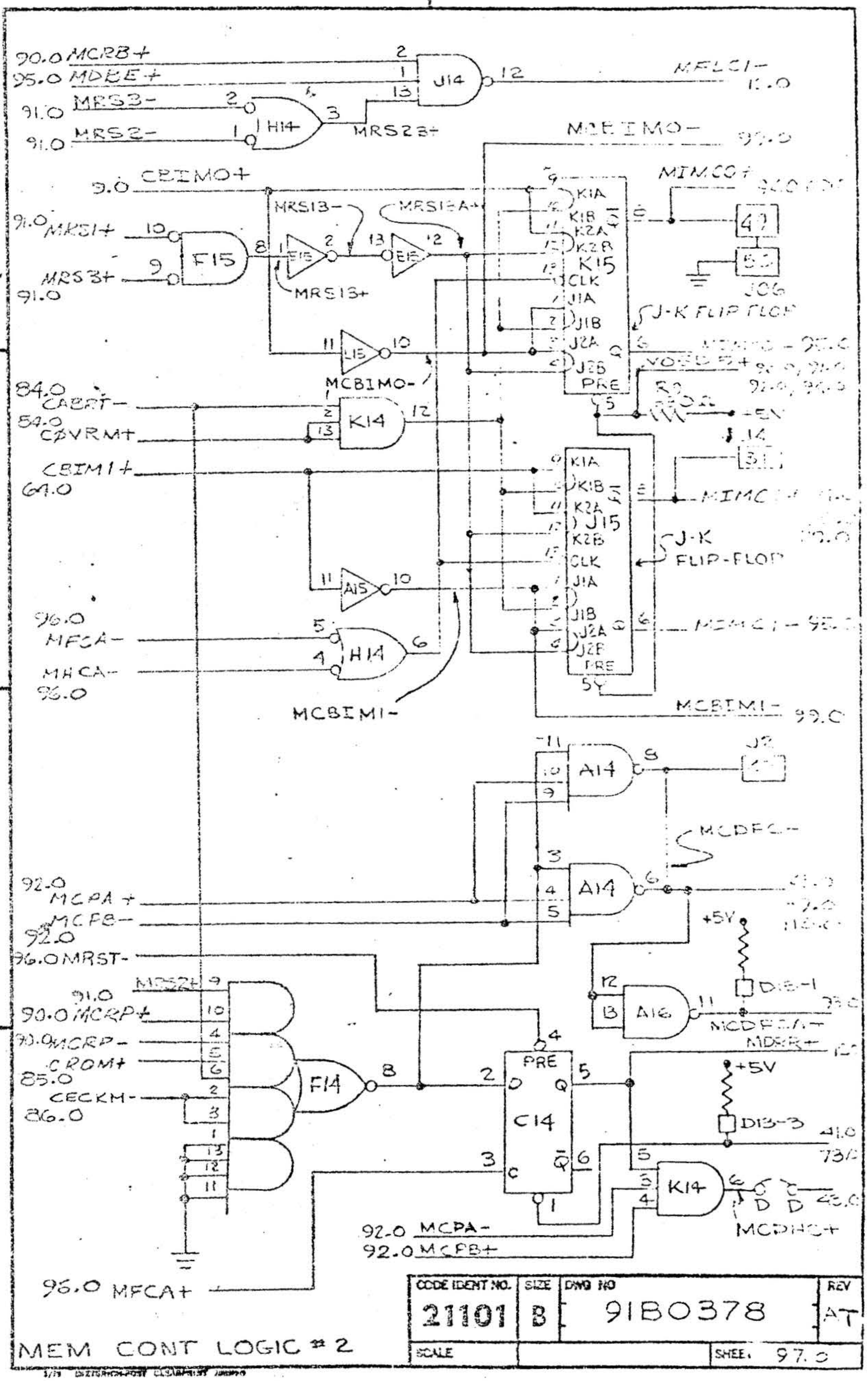
2
1
90.0 MCRB+
95.0 MDBE+
91.0 MRS3-
91.0 MRS2-
J14
H14
MRS23+
MFLC1-
MCBIMO-
9.0 CBIMO+
MRS1B-
MRS1BA+
91.0 MRS1+
MRS3+
91.0
F15
MRS1B+
L15
MCBIMO-
84.0 CABRT-
54.0 CBVRM+
CBIM1+
64.0
K14
A15
96.0 MFCA-
MHCA-
96.0
H14
MCBIMO-
K15
CLK
J1A
J1B
J2A
J2B
PRE
J-K FLIP FLOP
MIMCO+
J06
MCBIMO-
99.0
92.0 MCPA+
MCPB-
92.0
96.0 MRST-
MCRP+
91.0
90.0 MCRP+
90.0 MCRP-
CROM+
85.0
CECKM-
86.0
F14
C14
PRE
CLR
K14
A14
A16
MCDFC-
+5V
DIB-1
DIB-3
MCDFC1+
MDBR+
MCDHC+
92.0 MCPA-
92.0 MCPB+
96.0 MFCA+
MEM CONT LOGIC # 2
CODE IDENT NO. 21101
SIZE B
DWG NO 91B0378
REV AT
SCALE
SHEET 97.0

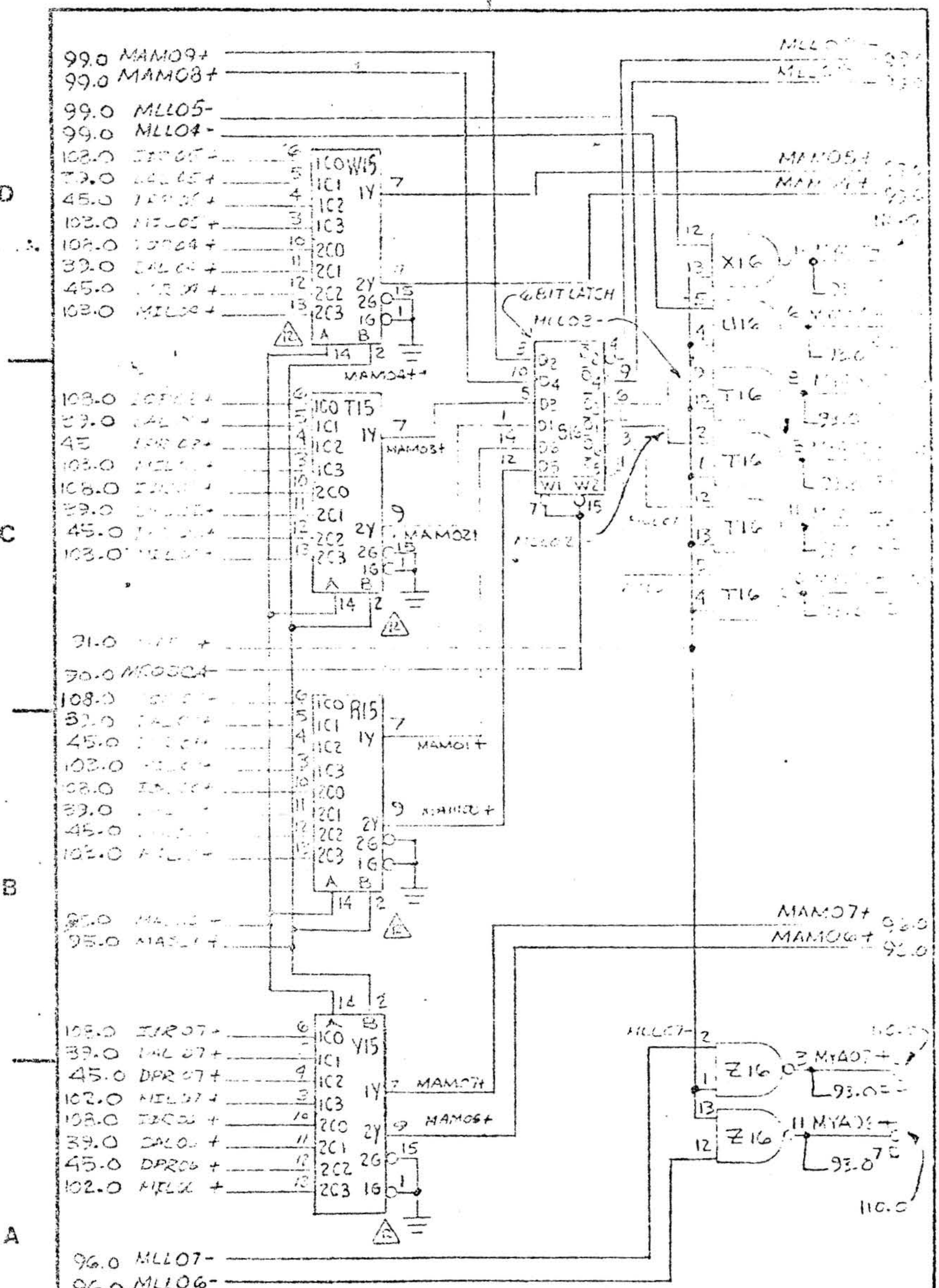
99.0 MAMO9+
99.0 MAMO8+
99.0 MLLO5-
99.0 MLLO4-
MAMO5+
MAMO4+
X16
4 BIT LATCH
MLLO3-
T16
MAMO3+
MAMO2+
MAMO1+
MAMO7+
MAMO6+
MLLO7-
MLLO6-
MEM CONT
Y15, R15, T15, W15
S15, U15, X15, Z15 ARE
DUAL 4 TO 1 MUX
CODE IDENT NO. 21101
SIZE B
DWG NO 91B0378
REV T
SCALE
SHEET 93.0

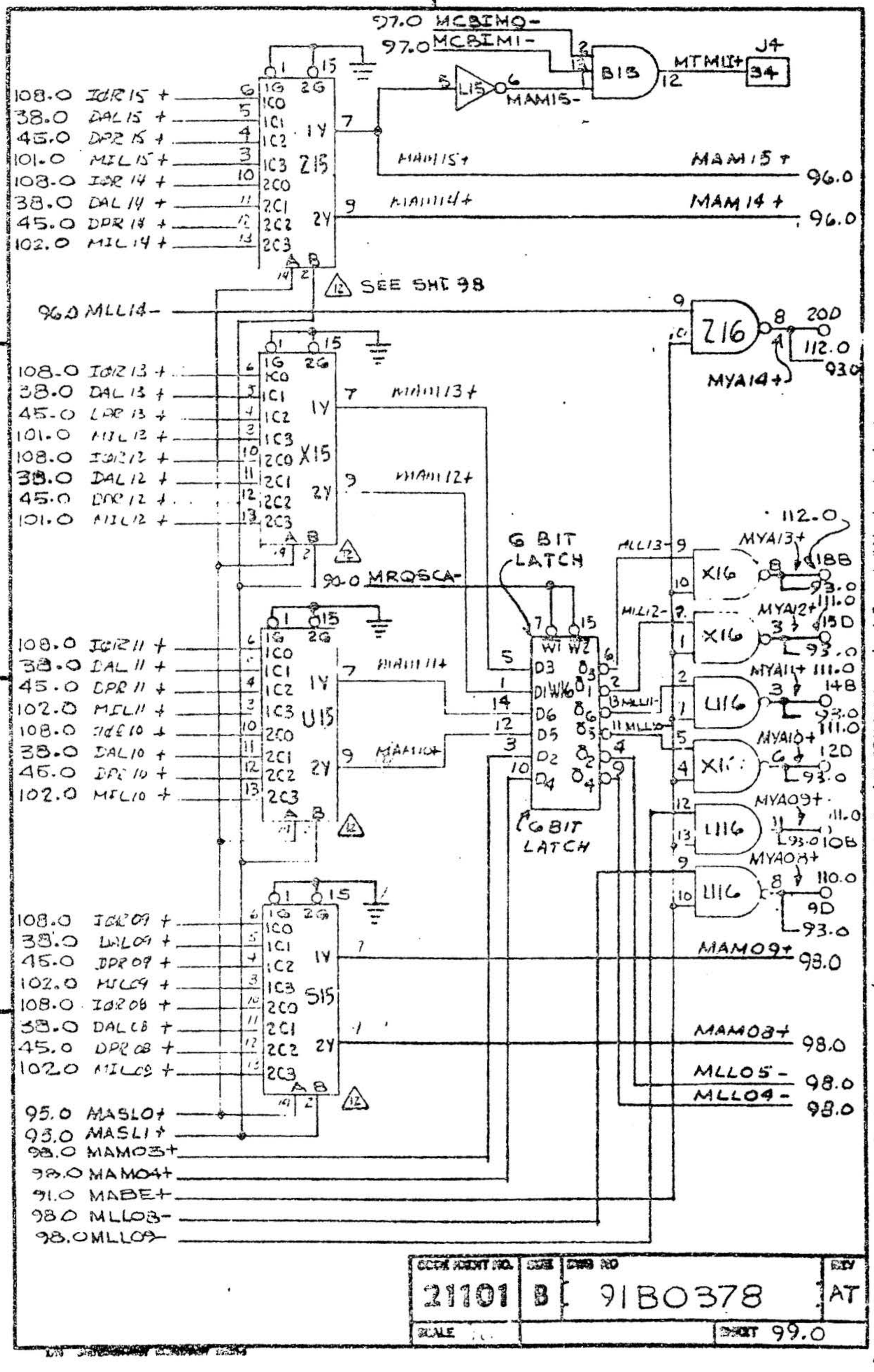
97.0 MCBIMO-
97.0 MCBIMI-
B13
J4
34
MTMII+
L15
MAMI5-
MAMI5+
MAM15+
96.0
MAMI14+
MAM14+
96.0
108.0 IOR15+
38.0 DAL15+
45.0 DPR15+
101.0 MIL15+
108.0 IOR14+
38.0 DAL14+
45.0 DPR14+
102.0 MIL14+
Z15
SEE SHT 98
96.0 MLL14-
Z16
20D
112.0
93D
MYA14+
108.0 IOR13+
38.0 DAL13+
45.0 DPR13+
101.0 MIL13+
108.0 IOR12+
38.0 DAL12+
45.0 DPR12+
101.0 MIL12+
X15
MAMI13+
MAMI12+
6 BIT LATCH
MRQSCA-
112.0
MYA13+
MLL13-
X16
18B
93.0
111.0
MYA12+
MIL12-
15D
MYAII+
148
MYA10+
12D
MYA09+
110.0
9D
108.0 IOR11+
38.0 DAL11+
45.0 DPR11+
102.0 MIL11+
108.0 IOR10+
38.0 DAL10+
45.0 DPR10+
102.0 MIL10+
U15
MAMI11+
MAMI10+
108.0 IOR09+
38.0 DAL09+
45.0 DPR09+
102.0 MIL09+
108.0 IOR08+
38.0 DAL08+
45.0 DPR08+
102.0 MIL08+
S15
MAMO9+
98.0
MAMO8+
98.0
MLLO5-
98.0
MLLO4-
98.0
95.0 MASLO+
93.0 MASLI+
98.0 MAMO3+
98.0 MAMO4+
91.0 MABE+
98.0 MLLO3-
98.0 MLLO9-
21101
B
91B0378
AT
SCALE
SHT 99.0

90.0 MIRB+

S14 QUAD 2 TO 1 MUX

38.0, DALO9+ — 2 1A
106.0, IØMO9+ — 3 1B
38.0, DALO8+ — 5 2A
106.0, IØMO8+ — 6 2B
39.0, DALO1+ — 14 3A
104.0, IØMO1+ — 13 3B
39.0, DALO0+ — 11 4A
104.0, IØMO0+ — 10 4B
1 S, 15 G
4 MDMO9+ 1Y
7 MDMO8+ 2Y
12 MDMO1+ 3Y
9 MDMO0+ 4Y

R14: 2, 1, 5, 4, 12, 13, 9, 10 → 3 MYDO9-, 6 MYDO8-, 11 MYDO1-, 8 MYDO0-

MYDO9- → 42D; 102.0,115.0
MYDO8- 101.0 → 41D; 102.0,115.0
MYDO1- 101.0 → 34D; 101.0,114.0
MYDO0- 102.0 → 33D; 101.0,114.0

U14 QUAD 2 TO 1 MUX

38.0 DAL11+ — 2 1A
106.0 IØM11+ — 3 1B
38.0 DAL10+ — 5 2A
106.0 IØM10+ — 6 2B
39.0 DAL03+ — 14 3A
104.0 IØM03+ — 13 3B
39.0 DALO2+ — 11 4A
104.0 IØMO2+ — 10 4B
1 S, 15 G
4 MDM11+ 1Y
7 MDM10+ 2Y
12 MDM03+ 3Y
9 MDMO2+ 4Y

T14: 2, 1, 5, 4, 12, 13, 9, 10 → 3 MYD11-, 6 MYD10-, 11 MYD03-, 8 MYDO2-

MYD11- → 44D; 102.0,115.0
MYD10- 101.0 → 43D; 102.0,115.0
MYD03- 101.0 → 36D; 101.0,114.0
MYDO2- 102.0 → 35D; 101.0,114.0

X14 QUAD 2 TO 1 MUX

38.0 DAL13+ — 2 1A
107.0 IØM13+ — 3 1B
38.0 DAL12+ — 5 2A
107.0 IØM12+ — 6 2B
39.0 DAL05+ — 14 3A
105.0 IØM05+ — 13 3B
39.0 DALO4+ — 11 4A
105.0, IØMO4 — 10 4B
1 S, 15 G
4 MDM13+ 1Y
7 MDM12+ 2Y
12 MDM05+ 3Y
9 MDM04+ 4Y

W14: 2, 1, 5, 4, 12, 13, 9, 10 → 3 MYD13-, 6 MYD12-, 11 MYD05-, 8 MYDO4-

MYD13- → 46D; 101.0,115.0
MYD12- → 45D; 101.0,115.0
MYD05- → 38D; 101.0,114.0
MYDO4- 102.0 → 37D; 101.0,114.0

Z14 QUAD 2 TO 1 MUX

38.0 DAL15+ — 2 1A
107.0 IØM15+ — 3 1B
38.0 DALM4+ — 5 2A
107.0 IØMM4+ — 6 2B
39.0 DALO7+ — 14 3A
105.0 IØMO7+ — 13 3B
39.0 DALO6+ — 11 4A
105.0 IØMO6+ — 10 4B
95.0 — MDBE+
1 S, 15 G
4 MDM15+ 1Y
7 MDM14+ 2Y
12 MDMO7+ 3Y
9 MDMO6+ 4Y

Y14: 2, 1, 5, 4, 12, 13, 9, 10 → 3 MYD15-, 6 MYD14-, 11 MYDO07-, 8 MYDO06-

MYD15- → 48D; 101.0,115.0
MYD14- 102.0 → 47D; 101.0,115.0
MYDO07- 102.0 → 40D; 102.0,114.0
MYDO06- 101.0 → 39D; 102.0,114.0

CODE IDENT NO.	SIZE	DWG NO	REV
21101	B	9180378	AT
SCALE			SHEET 100.0

MEM CONT

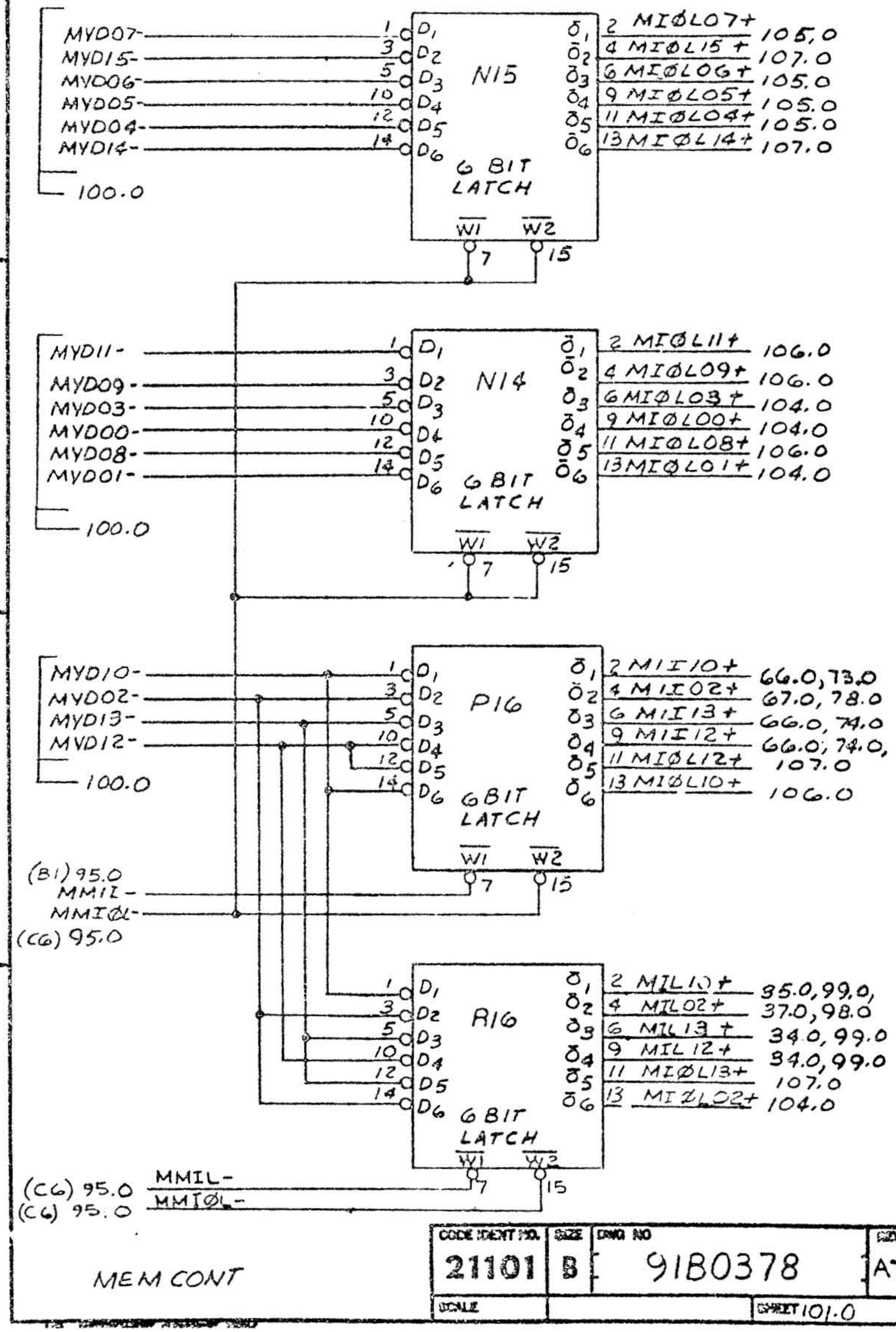
MYD07-
MYD15-
MYD06-
MYD05-
MYD04-
MYD14-
100.0
N15
D1 D2 D3 D4 D5 D6
1 3 5 10 12 14
O1 O2 O3 O4 O5 O6
2 MIØL07+ 105.0
4 MIØL15+ 107.0
6 MIØL06+ 105.0
9 MIØL05+ 105.0
11 MIØL04+ 105.0
13 MIØL14+ 107.0
6 BIT LATCH
W1 W2
7 15
MYD11-
MYD09-
MYD03-
MYD00-
MYD08-
MYD01-
100.0
N14
2 MIØL11+ 106.0
4 MIØL09+ 106.0
6 MIØL03+ 104.0
9 MIØL00+ 104.0
11 MIØL08+ 106.0
13 MIØL01+ 104.0
MYD10-
MYD02-
MYD13-
MYD12-
100.0
P16
2 MIIØ+ 66.0, 73.0
4 MIIØ2+ 67.0, 78.0
6 MII13+ 66.0, 74.0
9 MII12+ 66.0, 74.0, 107.0
11 MIØL12+
13 MIØL10+ 106.0
(B1) 95.0 MMIL-
MMIØL-
(C6) 95.0
R16
2 MIL10+ 35.0, 99.0,
4 MIL02+ 37.0, 98.0
6 MIL13+ 34.0, 99.0
9 MIL12+ 34.0, 99.0
11 MIØL13+ 107.0
13 MIØL02+ 104.0
(C6) 95.0 MMIL-
(C6) 95.0 MMIØL-
MEM CONT
CODE IDENT NO. 21101
SIZE B
DWG NO 91B0378
REV AT
SCALE
SHEET 101.0

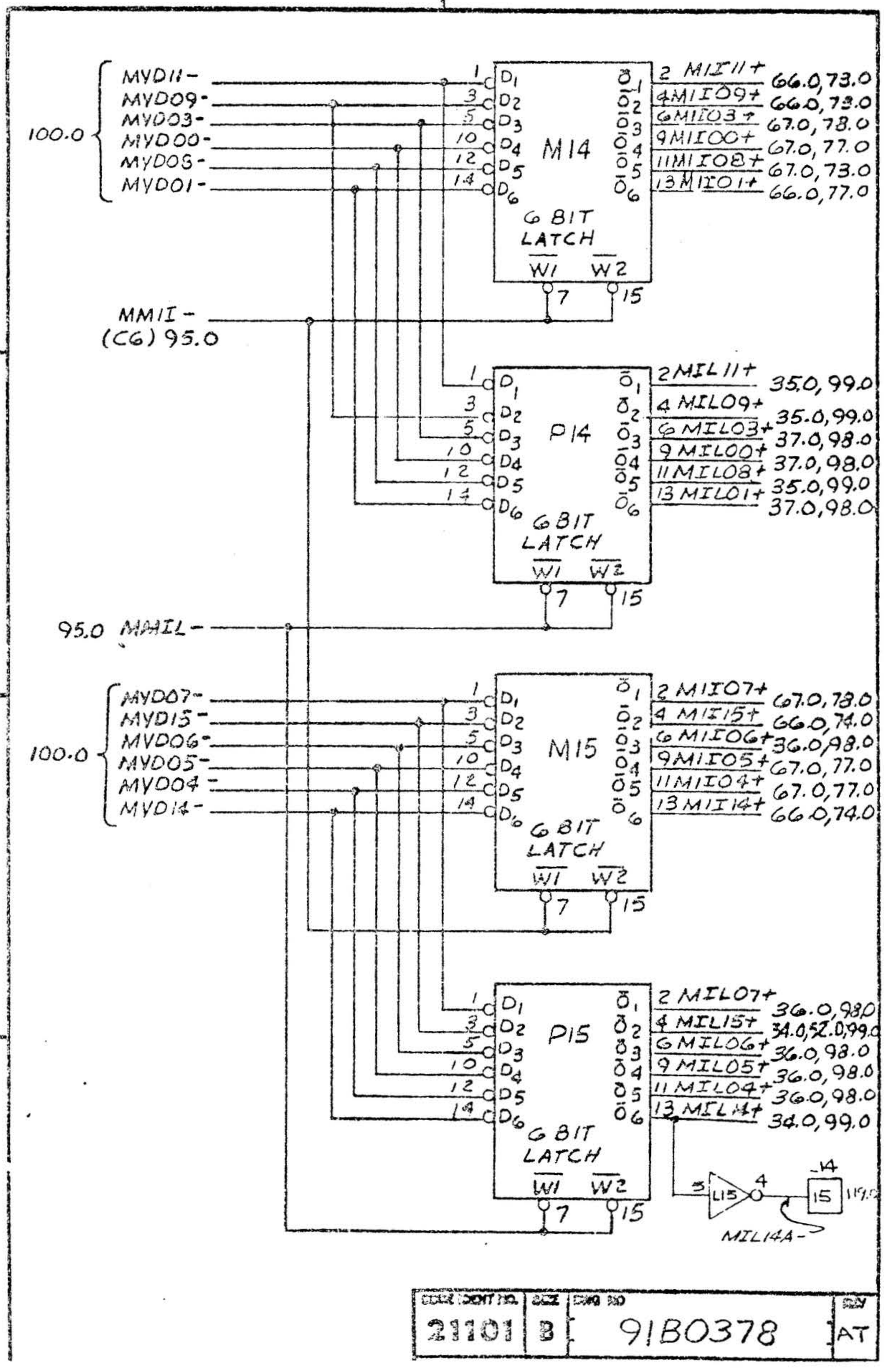
2
1
D
C
B
A
100.0
MYD11-
MYD09-
MYD03-
MYD00-
MYD05-
MYD01-
M14
6 BIT LATCH
W1
W2
2 MII11+ 66.0,73.0
4 MII09+ 66.0,73.0
6 MII03+ 67.0,78.0
9 MII00+ 67.0,77.0
11 MII08+ 67.0,73.0
13 MII01+ 66.0,77.0
MMII-
(C6) 95.0
P14
2 MIL11+ 35.0,99.0
4 MIL09+ 35.0,99.0
6 MIL03+ 37.0,98.0
9 MIL00+ 37.0,98.0
11 MIL08+ 35.0,99.0
13 MIL01+ 37.0,98.0
95.0 MAIL-
100.0
MYD07-
MYD15-
MYD06-
MYD05-
MYD04-
MYD14-
M15
2 MII07+ 67.0,78.0
4 MII15+ 66.0,74.0
6 MII06+ 36.0,98.0
9 MII05+ 67.0,77.0
11 MII04+ 67.0,77.0
13 MII14+ 66.0,74.0
P15
2 MIL07+ 36.0,98.0
4 MIL15+ 34.0,52.0,99.0
6 MIL06+ 36.0,98.0
9 MIL05+ 36.0,98.0
11 MIL04+ 36.0,98.0
13 MIL14+ 34.0,99.0
L15
MIL14A-
21101
B
91B0378
AT

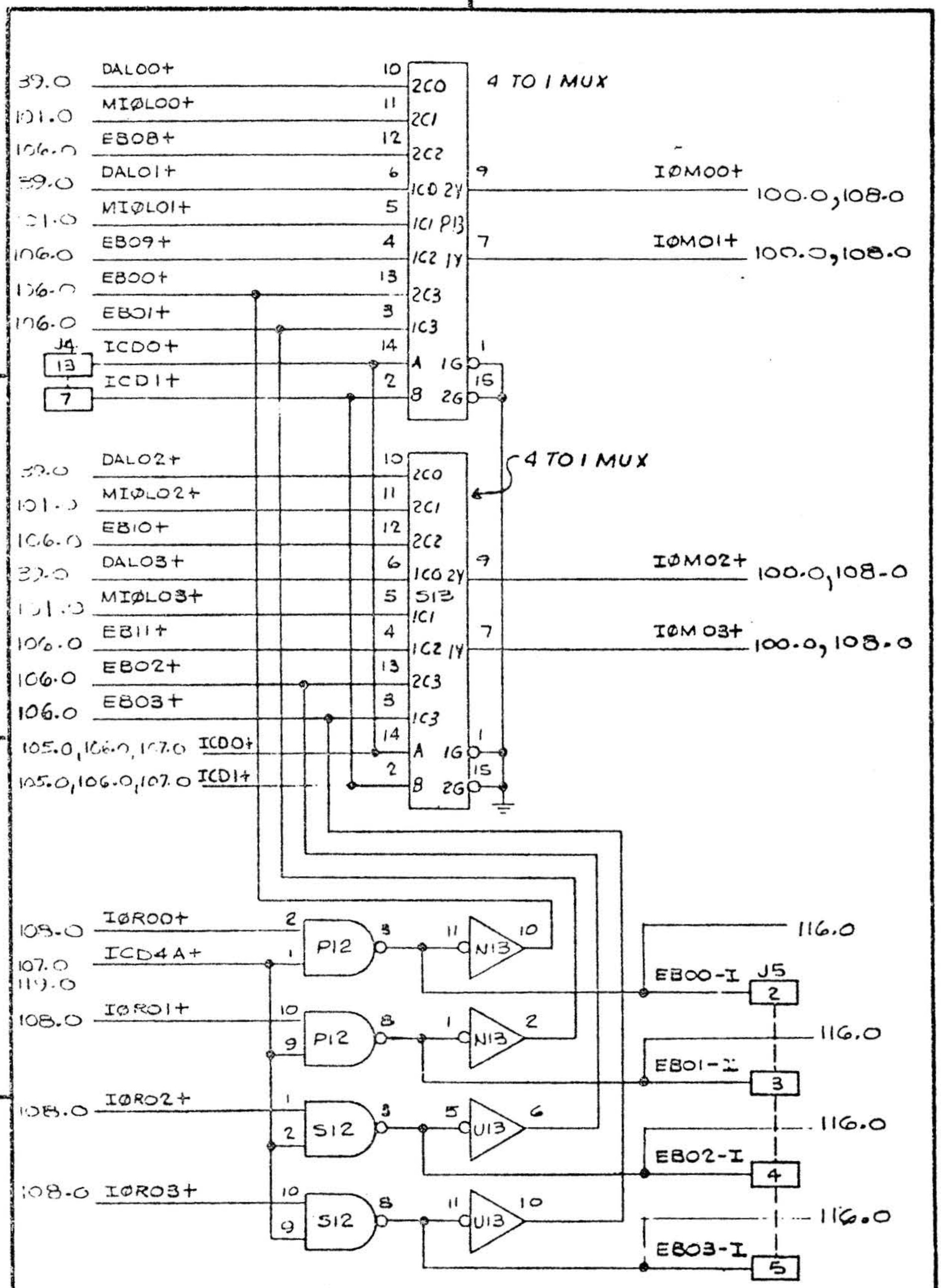
2
1
DAL00+
39.0
MIØL00+
101.0
EB08+
106.0
DAL01+
39.0
MIØL01+
101.0
EB09+
106.0
EB00+
106.0
EB01+
106.0
J4
13
7
ICD0+
ICD1+
4 TO 1 MUX
IØM00+
100.0,108.0
IØM01+
100.0,108.0
DAL02+
39.0
MIØL02+
101.0
EB10+
106.0
DAL03+
39.0
MIØL03+
101.0
EB11+
106.0
EB02+
106.0
EB03+
106.0
105.0,106.0,107.0 ICD0+
105.0,106.0,107.0 ICD1+
IØM02+
100.0,108.0
IØM03+
100.0,108.0
IØR00+
109.0
ICD4A+
107.0
119.0
IØR01+
108.0
IØR02+
108.0
IØR03+
108.0
P12
N13
S12
U13
116.0
EB00-I
EB01-I
EB02-I
EB03-I
J5
2
3
4
5
D
C
B
A
OCDE IDENT NO.
21101
SIZE
B
DWG NO
91B0378
REV
AT
SCALE
SHEET 104.0

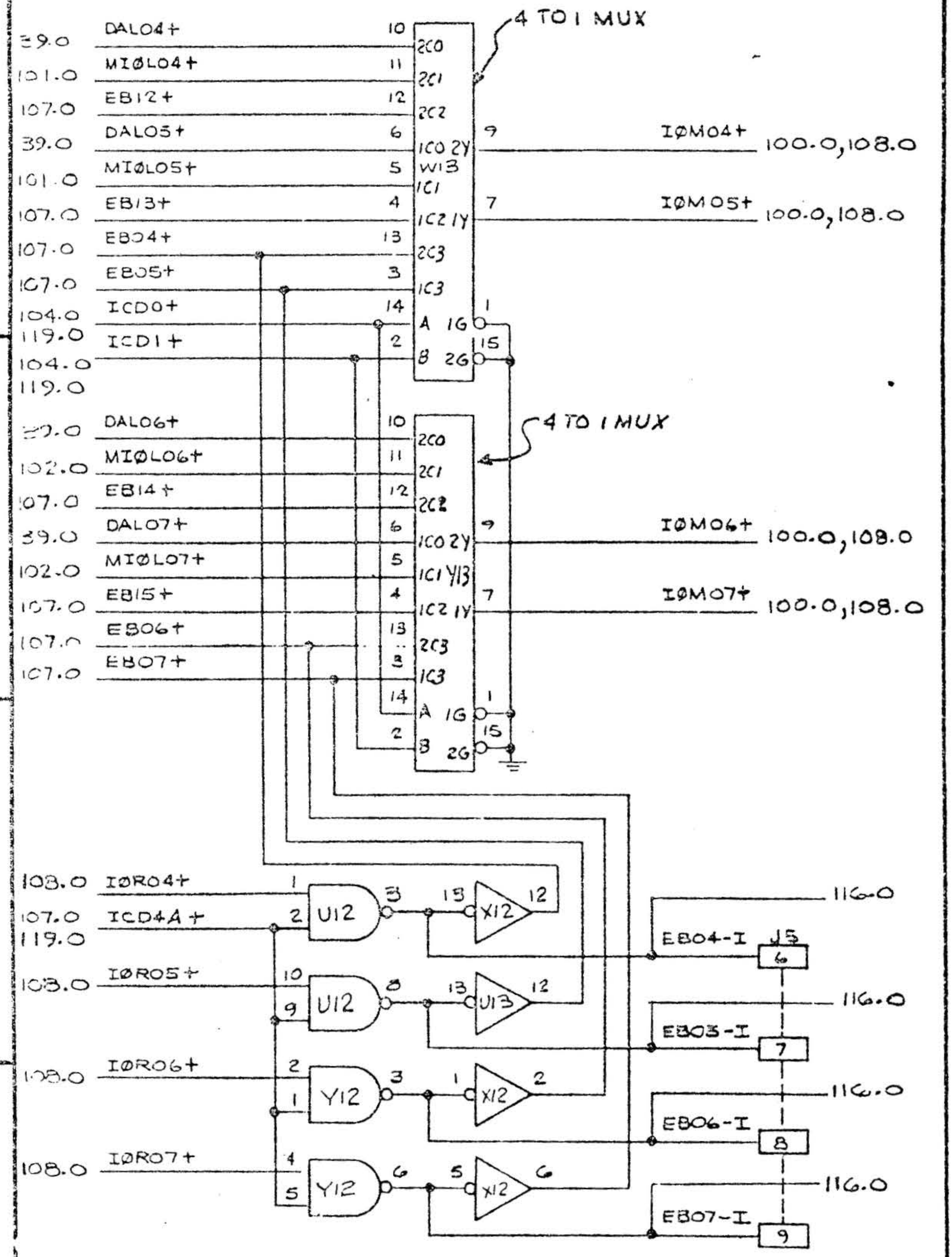

CODE IDENT NO.	SIZE	DWG NO	REV
21101	B	91B0378	AT
SCALE			SHEET 105 0

38.0 DALO8+
102.0 MIØLO8+
104.0 EBOO+
104.0 DALO9+
MIØLO9+
102.0
EBO1+
EBO8+
104.0
EBO9+
104.0
ICDO+
ICD1+
104.0
119.0

4 TO 1 MUX

IØMO8+ 100.0,108.0
IØMO9+ 100.0,108.0

38.0 DALIO+
102.0 MIØLIO+
104.0 EBO2+
DALII+
MIØLII+
102.0
EBO3+
104.0
EBIO+
EBII+

4 TO 1 MUX

IØMIO+ 100.0,108.0
IØMII+ 100.0,108.0

108.0 IØRO8+
107.0 ICD4A+
119.0

108.0 IØRO9+

108.0 IØRIO+

IØRII+

P12 S12 U13

116.0

EBO8-I J5 10
EBO9-I 11
EBIO-I 12
EBII-I 13

CODE IDENT NO.	SIZE	DWG NO.	REV
21101	B	91B0378	AT
SCALE		SHEET 106.0	

2 1

DAL12+ 10 2C0 — 4 TO 1 MUX
MIØL12+ 11 2C1
EB04+ 12 2C2
DAL13+ 6 1C0 2Y 9 IØM12+ 100.0,108.0
MIØL13+ 5 1C1
EB05+ 4 X13 1C2 1Y 7 IØM13+ 100.0,108.0
EB12+ 13 2C3
EB13+ 3 1C3
ICD0+ 104.0 14 A 1G 1
ICD1+ 119.0 2 B 2G 15
104.0
119.0

DAL14+ 10 2C0 — 4 TO 1 MUX
MIØL14+ 11 2C1
EB06+ 12 2C2
DAL15+ 6 1C0 2Y 9 IØM14+ 100.0,108.0
MIØL15+ 5 Z13 1C1
EB07+ 4 1C2 1Y 7 IØM15+ 100.0,108.0
EB14+ 13 2C3
EB15+ 3 1C3
14 A 1G 1
2 B 2G 15

IØR12+ 12 U12 11 11 X12 10 116.0
J4 9 ICD4A- 13
EB12-I J5 14
IØR13+ 5 U12 6 3 U13 4 116.0
4 EB13-I 15
IØR 4+ 12 Y12 11 3 Y12 4 116.0
13 EB14-I 16
IØR 5+ 10 Y12 8 8 Y12 8 116.0
9 EB15-I 17

CODE IDENT NO.	SIZE	DWG NO	REV
21101	B	9180378	AT
SCALE		SHEET 107.0	

2 1

R12 — 4-BIT SHIFT REG

104.0	IØM00+	3	IØR00+ 37.0,93.0,104.0
106.0	IØM08+	4	IØR08+ 35.0,99.0,106.0
104.0	IØM01+	5	IØR01+ 37.0,98.0,104.0
106.0	IØM09+	6	IØR09+ 35.0,99.0,106.0
119.0	J4 5 — ICD2+	9	
	J4 3 — ICD3+	10	
119.0		7	

T12 — 4-BIT SHIFT REG

104.0	IØM02+	3	IØR02+ 37.0,98.0,104.0
106.0	IØM10+	4	IØR10+ 35.0,99.0,106.0
104.0	IØM03+	5	IØR03+ 37.0,98.0,104.0
106.0	IØM11+	6	IØR11+ 35.0,99.0,106.0
		9	
		10	
		7	

W12 — 4-BIT SHIFT REG

105.0	IØM04+	3	IØR04+ 36.0,98.0,105.0
107.0	IØM12+	4	IØR12+ 34.0,99.0,107.0
105.0	IØM05+	5	IØR05+ 36.0,98.0,105.0
107.0	IØM13+	6	IØR13+ 34.0,99.0,107.0
		9	
		10	
		7	

Z12 — 4-BIT SHIFT REG

105.0	IØM06+	3	IØR06+ 36.0,98.0,105.0
107.0	IØM14+	4	IØR14+ 34.0,99.0,107.0
105.0	IØM07+	5	IØR07+ 36.0,98.0,105.0
107.0	IØM15+	6	IØR15+ 34.0,99.0,107.0
		9	
		10	
		7	

96.0 MFCA− → B15 pins 3, 4, 5 → pin 6

IØRC− → B15 pin 5

75.0 IRQM+ → H14 pin 12

96.0 MHCA+ → H14 pin 13

H14 pin 11 → B15 pin 4

21101	B	91B0378	AT
SCALE			SHEET 104.0

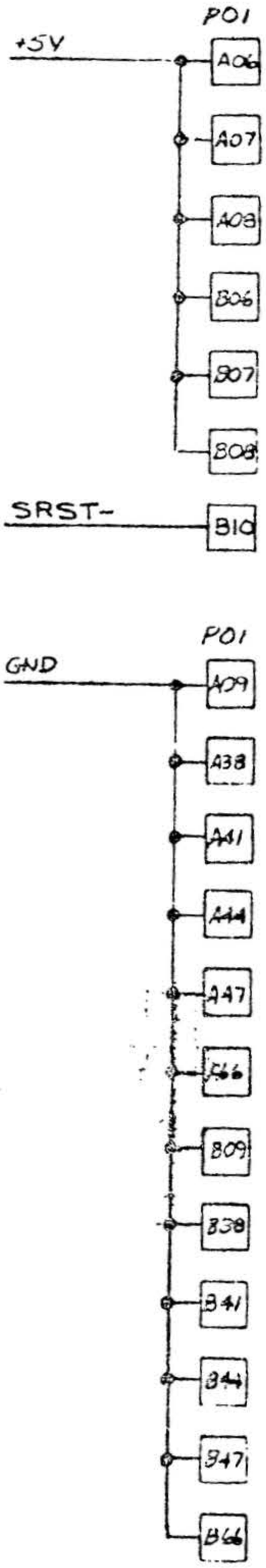

POWER & GND INPUTS

21101	B	91B0378	AT
SCALE		SHEET 109.0	

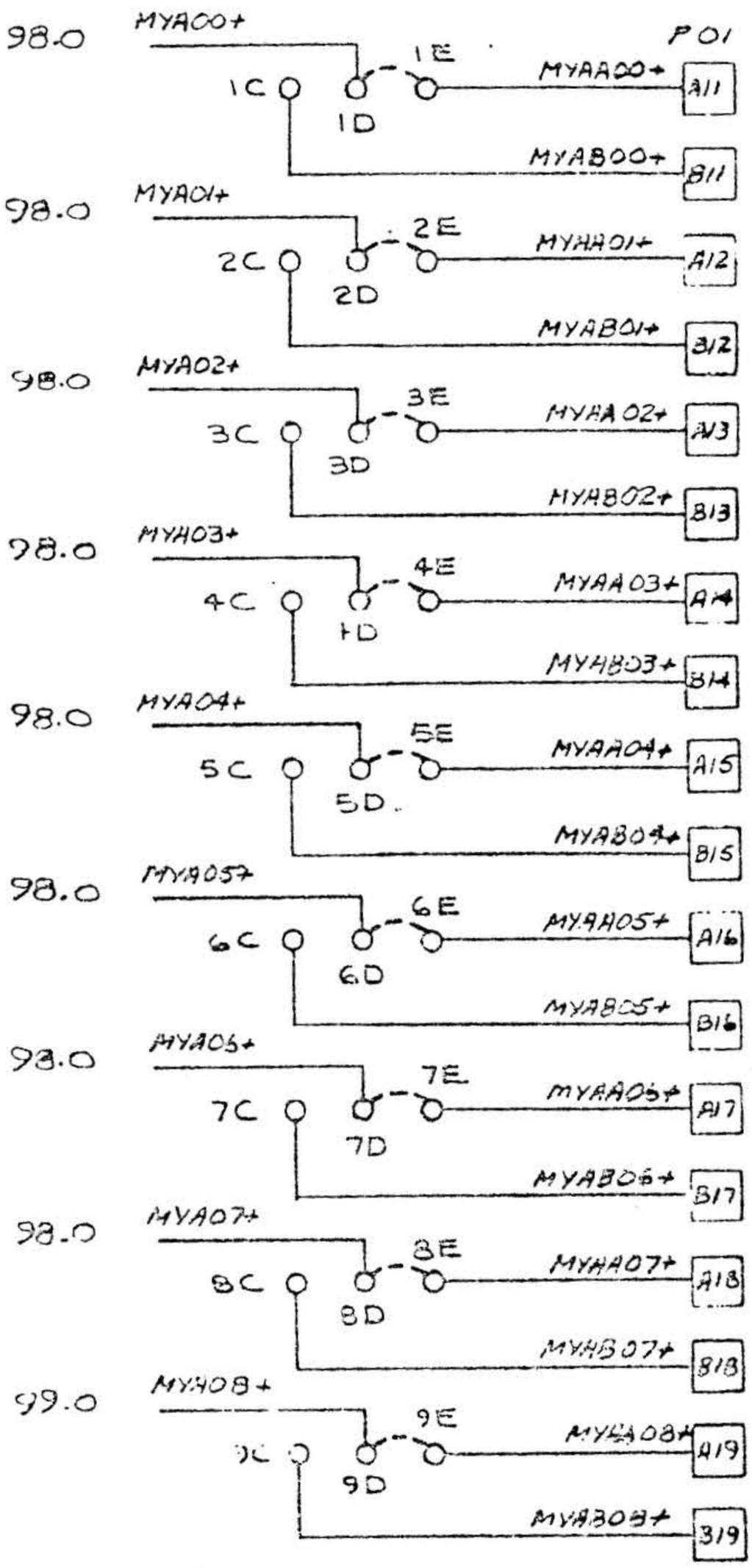

MEMORY ADDRESS OUTPUTS 1

21101	B	9180378	AT
SCALE —		SHEET 110 OF	

2 1

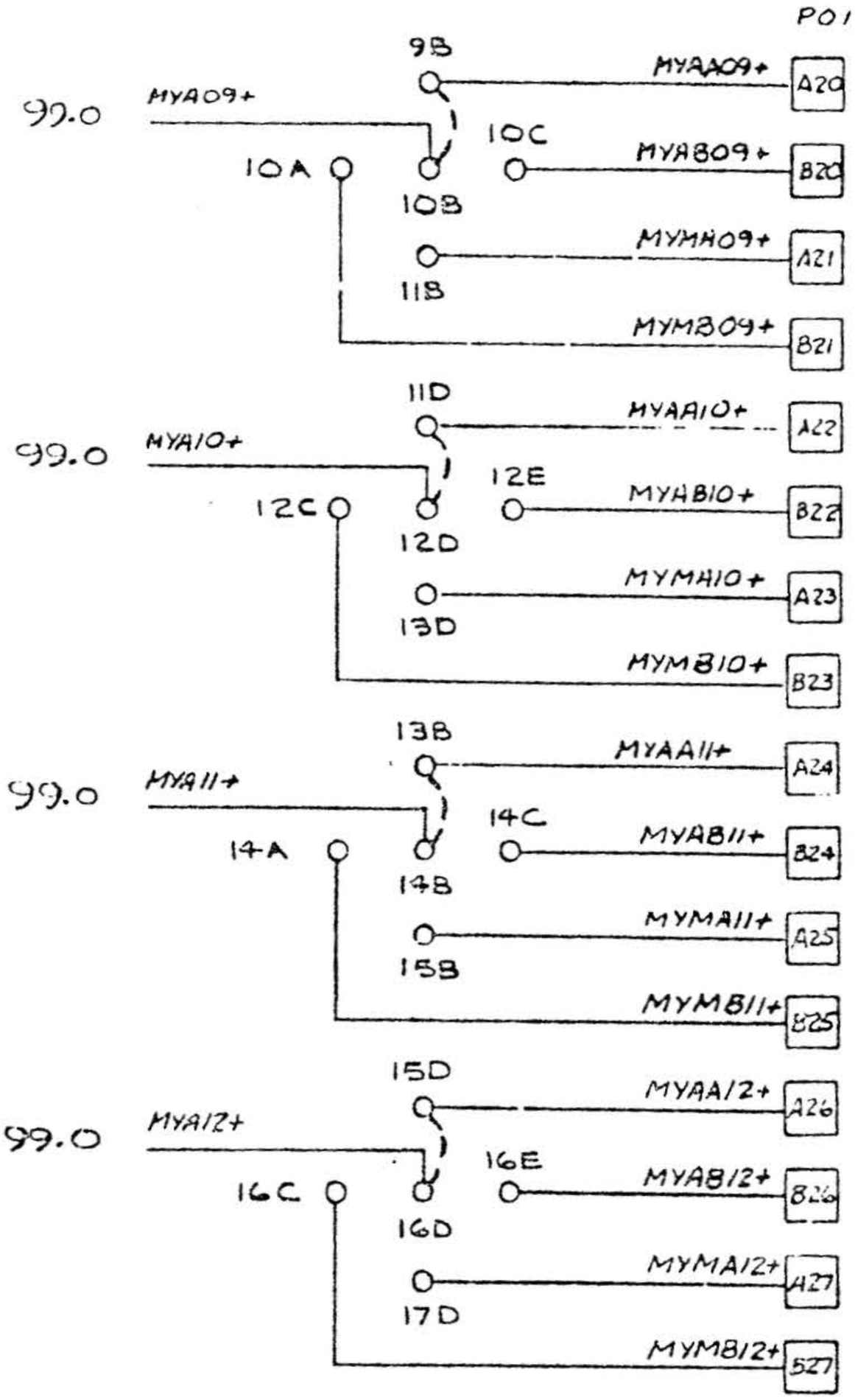

MEMORY ADDRESS OUTPUTS 2

21101	B	9180378	AT
SCALE		SHEET 111.0	

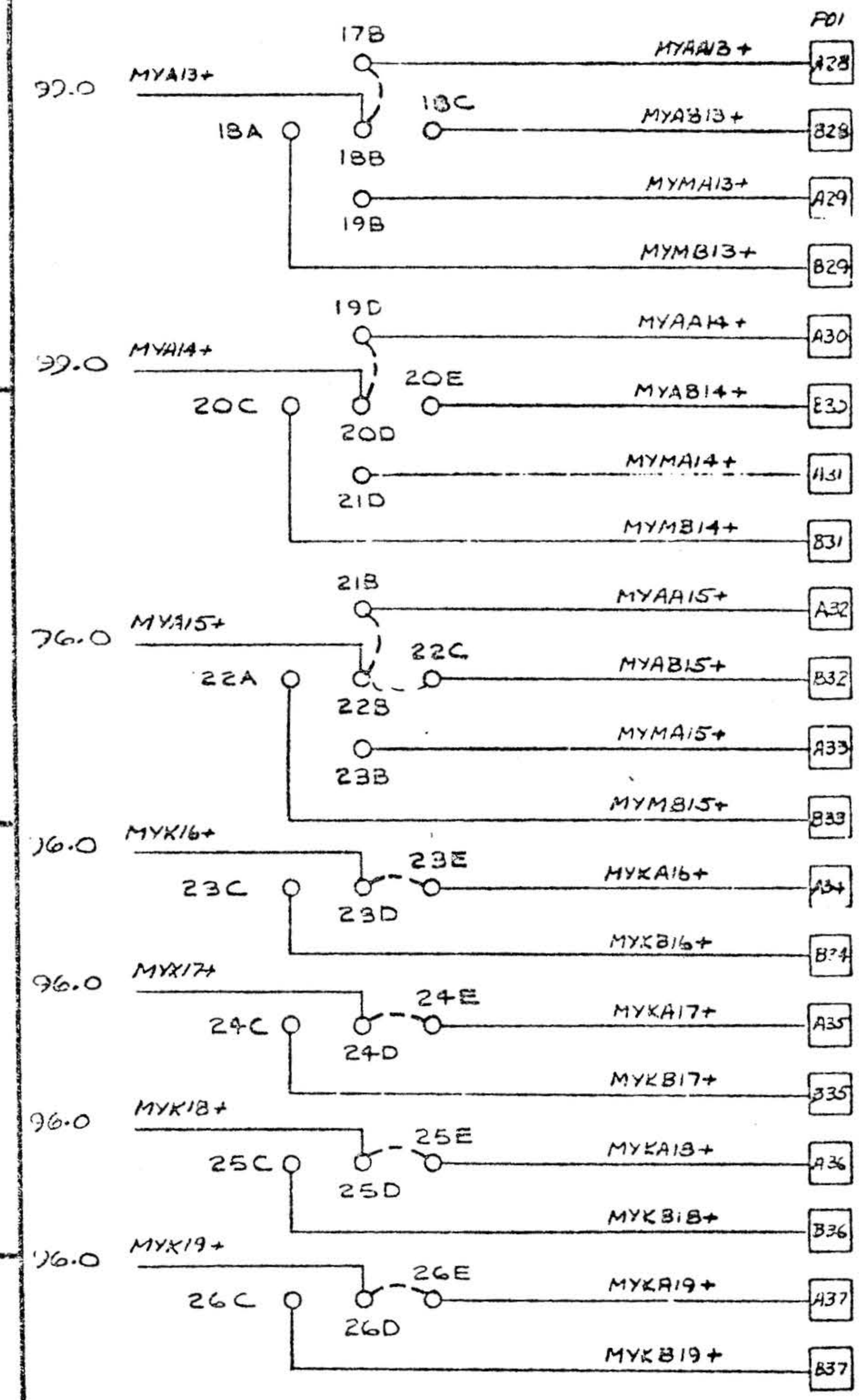
2
1
F01
17B
MYAAB+
A28
99.0
MYA13+
18C
MYAB13+
B28
18A
18B
MYMA13+
A29
19B
MYMB13+
B29
19D
MYAA14+
A30
99.0
MYA14+
20E
MYAB14+
B30
20C
20D
MYMA14+
A31
21D
MYMB14+
B31
21B
MYAA15+
A32
96.0
MYA15+
22C
MYAB15+
B32
22A
22B
MYMA15+
A33
23B
MYMB15+
B33
96.0
MYK16+
23E
MYKA16+
A34
23C
23D
MYKB16+
B34
96.0
MYK17+
24E
MYKA17+
A35
24C
24D
MYKB17+
B35
96.0
MYK18+
25E
MYKA18+
A36
25C
25D
MYKB18+
B36
96.0
MYK19+
26E
MYKA19+
A37
26C
26D
MYKB19+
B37
MEMORY ADDRESS OUTPUTS 3
21101
B
91B0378
AT
SHEET 112.0

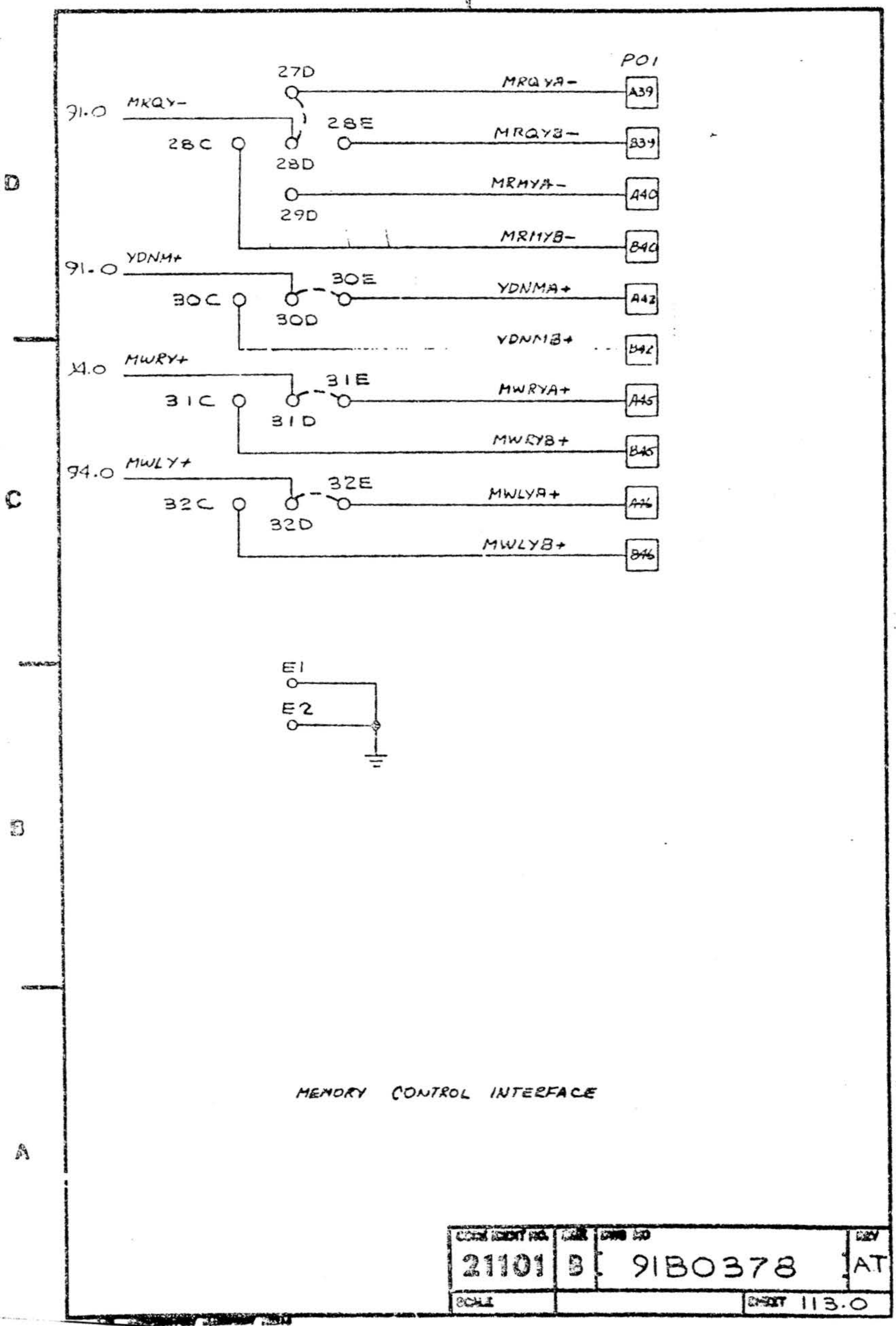
2
1
D
C
B
A
P01
27D
MRQYA-
A39
91.0
MKQY-
28E
28C
MRQYB-
B39
28D
MRMYA-
A40
29D
MRMYB-
B40
91.0
YDNM+
30E
YDNMA+
A42
30C
30D
YDNMB+
B42
94.0
MWRY+
31E
MWRYA+
A45
31C
31D
MWRYB+
B45
94.0
MWLY+
32E
MWLYA+
A46
32C
32D
MWLYB+
B46
E1
E2
MEMORY CONTROL INTERFACE
21101
B
91B0378
AT
SCALE
SHEET 113.0

2 1

100.0 MYD00-

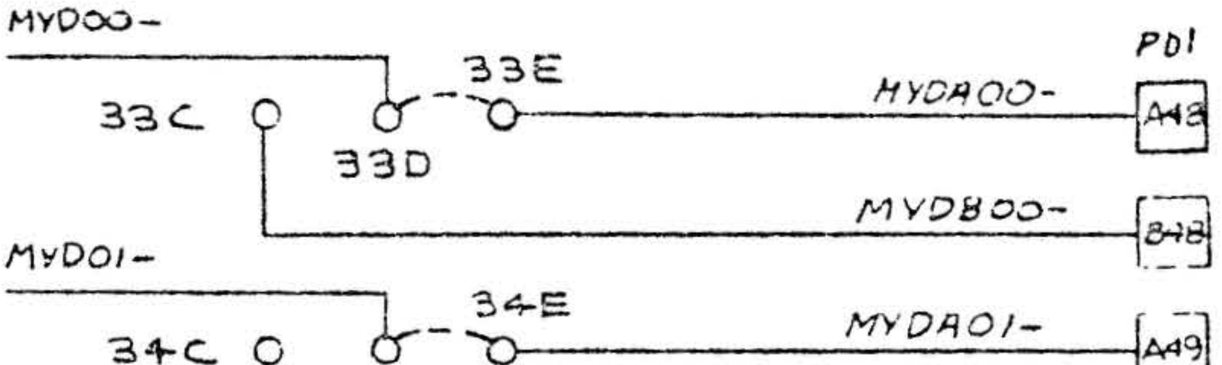

100.0 MYD01-

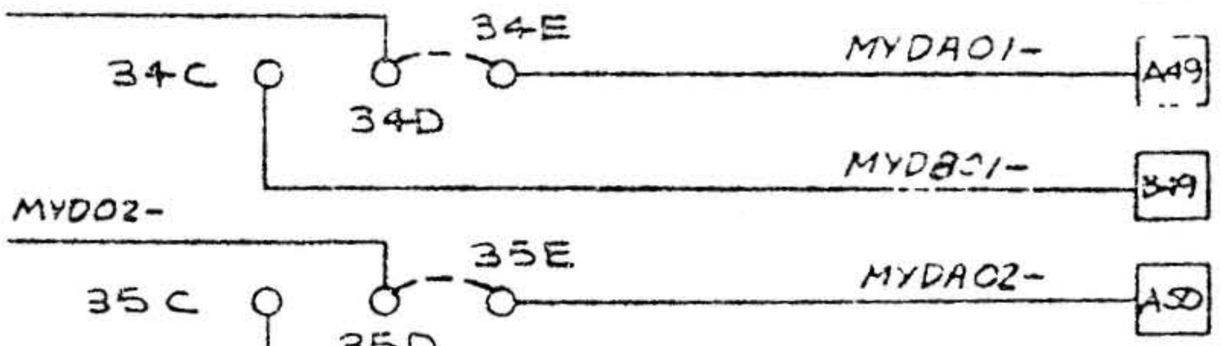

100.0 MYD02-

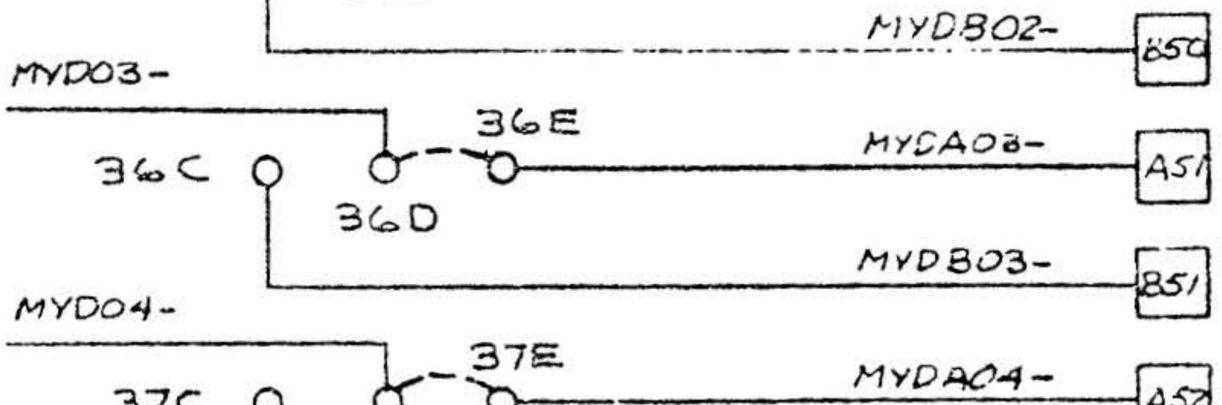

100.0 MYD03-

100.0 MYD04-

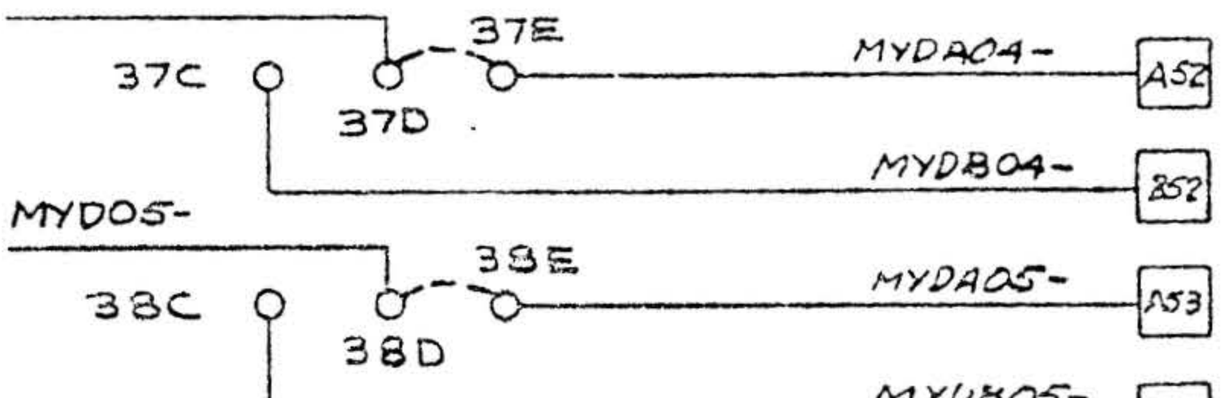

100.0 MYD05-

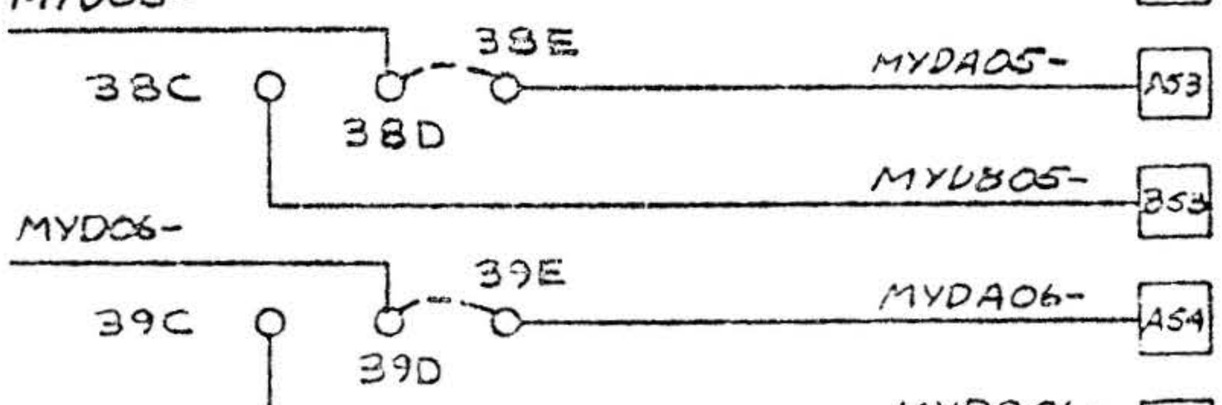

100.0 MYD06-

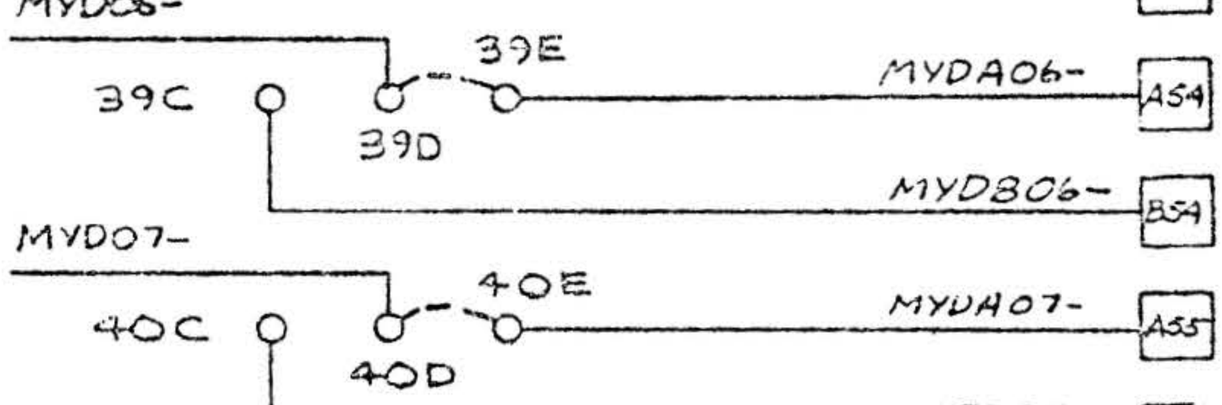

100.0 MYD07-

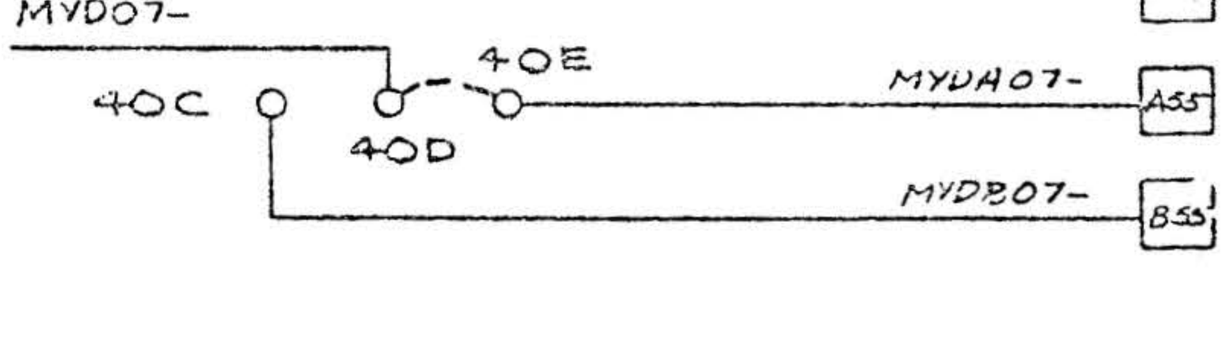

MEMORY DATA I

CODE IDENT NO.	SIZE	DWG NO	REV
21101	B	91B0378	AT
SCALE		SHEET 114.0	

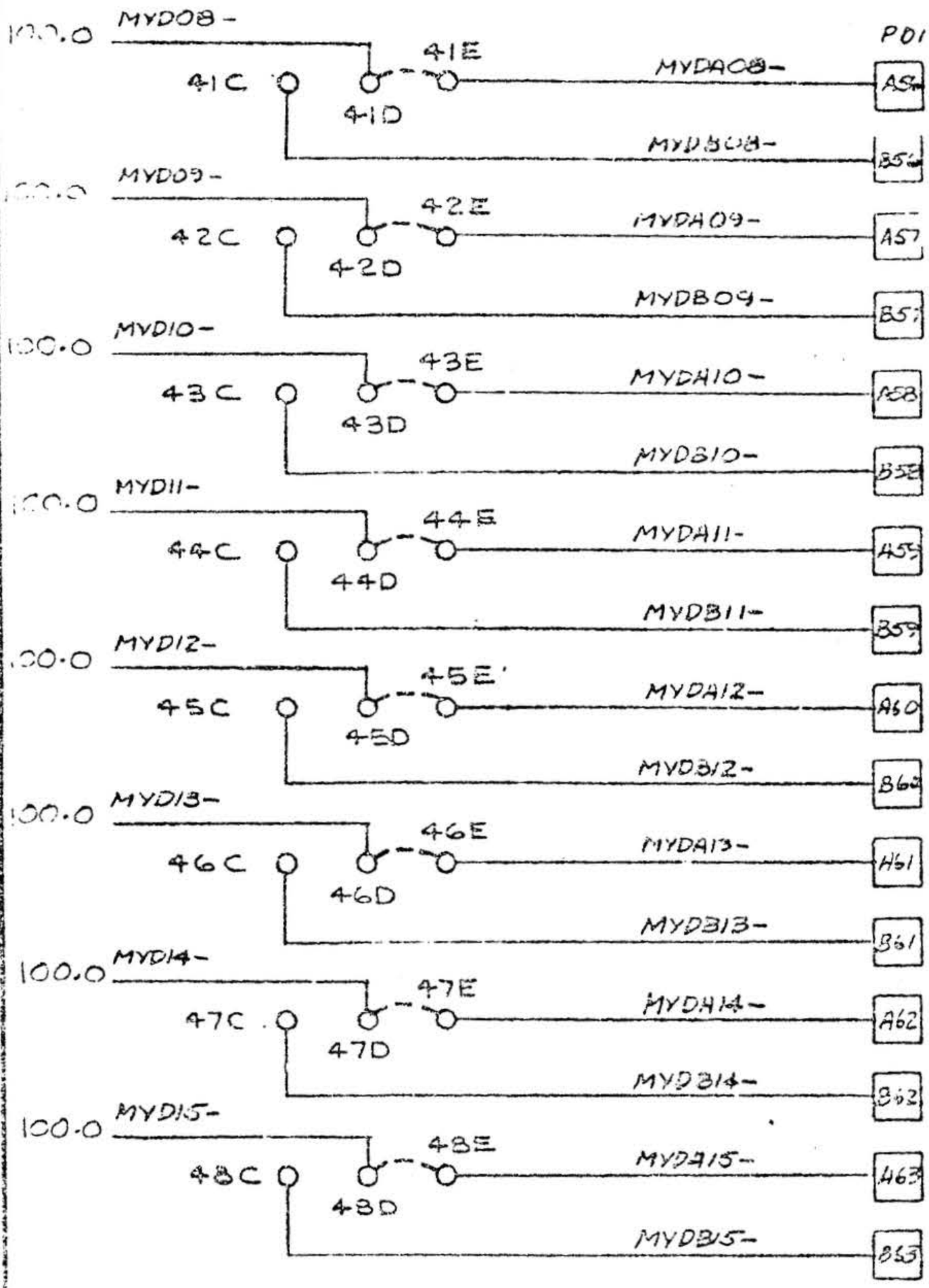

MEMORY DATA 2

CODE IDENT NO.	SIZE	DWG NO	REV
21101	B	91B0378	AT
SCALE		SHEET 115.0	

		J05.			J05
	GRD	1	104.0	EB00-I	2
104.0	EB01-I	3	104.0	EB02-I	4
104.0	EB03-I	5	105.0	EB04-I	6
105.0	EB05-I	7	105.0	EB06-I	8
105.0	EB07-I	9	106.0	EB08-I	10
106.0	EB09-I	11	106.0	EB10-I	12
106.0	EB11-I	13	107.0	EB12-I	14
107.0	EB13-I	15	107.0	EB14-I	16
107.0	EB15-I	17		GRD	18
52.0	NS32-	19	52.0	NSS1-	20
52.0	NSSB-	21		GRD	22
N/U	IEIDLA+	23		GRD	24
95.0	NSTP-	25		GRD	26
N/U	ØPSTRT-	27		GRD	28
	PRIOX-I	29		GRD	30
	SERX-I	31		GRD	32
	IURX-I	33		GRD	34
	TPOX-I	35		GRD	36
	TPIX-I	37		GRD	38
	IUAX-I	39		GRD	40
	FRYX-I	41		GRD	42
	IUCX-I	43		GRD	44
	SYRT-I	45		GRD	46
	DRYX-I	47		GRD	48
N/U	IUJX-I	49		GRD	50

N/U INDICATES SIGNAL IS NOT USED ON PROCESSOR BOARD

21101	B	91B0378	T
		SHEET 115	

		J03			J03	
	GRD	1		GRD	2	
74.0	CIDOO+	3	86.0,73.0	CIDXX2+	4	
65.0	CRIEN-	5	86.0,73.0	CEDXXO+	6	
	GND	7	76.0	CCKEN+	8	
76.0	CEND+	9		GND	10	
53.0,54.0,55.0	XCSEN+	11	76.0	CAEN+	12	
	GPD	13	53.0	CBI55+	14	
53	CBI54+	15	53.0	CBI53+	16	
53.0	CBI52+	17	54.0	CBI51+	18	
54.0	CBI42+	19	54.0	CBI41+	20	
54.0	CBI40+	21	53.0	CBI63+	22	
53.0	CBI62+	23	53.0	CBI61+	24	
53.0	CBI60+	25	63.0	CBI48+	26	
53.0	CBI49+	27	53.0	CBI50+	28	
53.0	CBI51+	29	54.0	CBI47+	30	
54.0	CBI46+	31	54.0	CBI45+	32	
54.0	CBI44+	33	54.0	CBI32+	34	
54.0	CBI33+	35	54.0	CBI34+	36	
54.0	CBI35+	37	53.0	CBI69+	38	
53.0	CBI58+	39	53.0	CBI57+	40	
53.0	CBI56+	41	54.0	CBI39+	42	
54.0	CBI38+	43	54.0	CBI37+	44	
54.0	CBI36+	45	56.0	CBIOO+	46	
56.0	CBIO1+	47	56.0,21.0	CBIO2+	48	
56.0	CBIO3+	49		GPD	50	

21101	B	9180378	T
SCALE		SHEET 11 OF 0	

		J02			J02
	GRD	1	56.0	CBIO4+	2
56.0	CBIO5+	3	61.0	CBIO6+	4
56.0, 70.0	CBIO7+	5	56.0	CBIO8+	6
56.0	CBIO9+	7	56.0	CBI10+	8
56.0	CBI11+	9	56.0	CBI12+	10
56.0	CBI13+	11	56.0	CBI14+	12
56.0	CBI15+	13	55.0	CBI16+	14
55.0	CBI17+	15	55.0	CBI18+	16
55.0	CBI19+	17	55.0	CBI20+	18
55.0	CBI21+	19	55.0	CBI22+	20
55.0	CBI23+	21	55.0	CBI24+	22
55.0	CBI25+	23	55.0	CBI26+	24
55.0	CBI27+	25	55.0	CBI28+	26
55.0	CBI29+	27	55.0	CBI30+	28
55.0	CBI31+	29		GRD	30
58.0, 58.0, 79.0	CEAD8-	31	58.0, 79.0 88.0	CEAD7-	32
88.0, 58.0, 79.0	CEAD6-	33	58.0, 79.0 93.0	CEAD5-	34
58.0, 79.0	CEAD4-	35	59.0, 78.0	CEAD3-	36
59.0, 78.0	CEAD2-	37	60.0, 77.0	CEAD1-	38
60.0, 77.0	CEAD0-	39		GRD	40
57.0	CPAD-	41		GRD	42
92.0	TCLKC-	43		GRD	44
95.0	MMII-	45		GRD	46
97.0	MCDFC-	47		GRD	48
91.0	XCFST+	49		GRD	50

CAGE IDENT NO. 21101	SIZE B	DWG NO. 91B0378	REV T
SCALE		SHEET 116.2	

	GRD	J04 1	61.0	CBTC+	J04 2
108.0	ICD3+	3	61.0	CBTC-	4
108.0	ICD2+	5	61.0	CBTC+	6
104.0	ICD1+	7	61.0	CBTSR+	8
107.0	ICD4H+	9	89.0	CINTF+	10
95.0	IRQM-	11	N/U	PRIX-I	12
104.0	ICDO+	13	43.0	DJUMP+	14
102.0	MILM4A-	15	64.0	CBAB0+	16
52.0	ISRD+	17	64.0	CBAB1+	18
73.0	CINMPC-	19	60.0	IIA0+	20
87.0	ØINT-	21		MTRC-	22
87.	IRQC-	23	76.0	CACIDE+	24
92.0	MHC-	25	59.0	IIA3+	26
62.0	CBMT+	27	59.0	IIA2+	28
74.0	CIDIØ+	29	60.0	IIA1+	30
97.0	MIMC1+	31	92.0	MØCLK+	32
94.0	IWRMC-	33	99.0	MTMII+	34
94.0	IWLMC-	35	64.0	CBMR+	36
90	MAKIØ+	37	92.0	MFC-	38
91.0	MRSZA-	39	86.0	CPMAST+	40
90.0	ØRQM-	41	11.0	CCSSD+	42
90.0	MAKØ+	43	86.0	IAKC1-	44
86.0	CIDHLT+	45	65.0	CRQIØ+	46
86.0	CIDJMK+	47	86.0	IDNC-	48
90.0	MCR8+	49		GRD	50

21101	B	91B0378	AT
			NEXT 119.0