NOTES: (UNLESS OTHERWISE SPECIFIED)

1. THIS DRAWING CONSISTS OF THE FOLLOWING SHEETS:
   1.0, 2.0, 3.0, 4.0, 5.0, 6.0, 7.0, 8.0, 9.0, 10.0, 11.0

REFERENCE DESIGNATIONS	
LAST USED	NOT USED
C37	C1, 2, 5, 6 C13-23
P3	P2

REFERENCE DRAWINGS	
44D0451	ASSEMBLY
44P0451	PARTS LIST
95W0606	WIRE LIST
40D0458	P.W. BOARD
97D0538	ARTWORK
97D0539	SILKSCREEN (COMP)
97D0540	SILKSCREEN (CKT)
97D0542	SOLDER MASK

DR	MAUCARELLA	4-21-71
CHK	[illegible]	4/30/71
DSGN	—	
ENGR	R C DRUMM	10/13/70
APPD	D BROCKETT	10/13/70
APPD	D MARTIN	10/13/70

THIS DOCUMENT MAY CONTAIN PROPRIETARY INFORMATION AND SUCH INFORMATION MAY NOT BE DISCLOSED TO OTHERS FOR ANY PURPOSE OR USED TO PRODUCE THE ARTICLE OR SUBJECT, WITHOUT WRITTEN PERMISSION FROM VDM

varian data machines /a varian subsidiary
2722 michelson drive / irvine / california / 92664

TITLE
LOGIC DIAG,
TTY/ABL CONT.

CODE IDENT NO.	SIZE	DWG NO	REV
21101	C	91C0219	G
SCALE	620/F-15	SHEET 1.0	

REVISIONS			
SYM	ZONE	DESCRIPTION	APPROVED
F	3J11	ADD PULLUP RESISTORS TO UNUSED I.C. CKT PINS. PER EN: 5340 UPDATED AND REDRAWN	
G		REVISED PER EN 80006	

TABLE OF CONTENTS

DESCRIPTION	SHEET NO.
COVER	1.0
REVISION AND TABLE OF CONTENTS	2.0
COMPONENT MAP AND DECOUPLING	3.0
POWER AND GRD. WIRED DISTRIBUTION	4.0
CONNECTOR	5.0, 6.0
CONTROL LOGIC AND SENSE RESPONSE	7.0
WRITE REGISTER CONTROL LOGIC	8.0
READ REGISTER CONTROL LOGIC	9.0
WRITE REGISTER	10.0
READ REGISTER	11.0

CODE IDENT NO.	SIZE	DWG NO
21101	C	91C0219
SCALE		SHEET 2.0

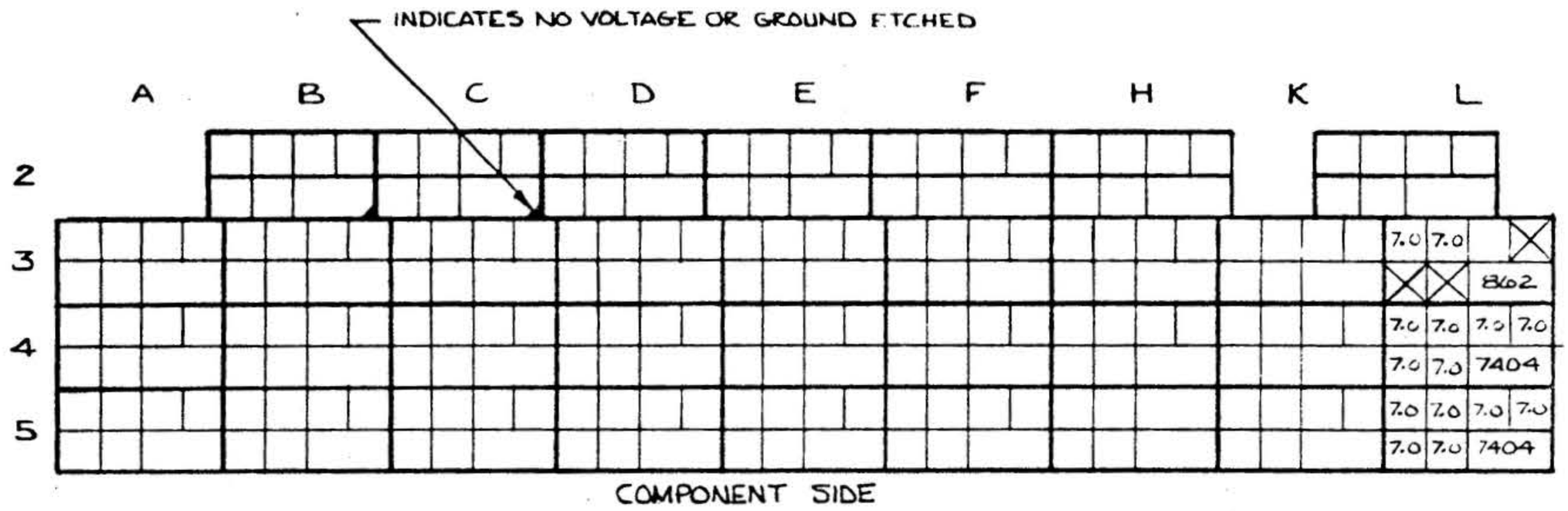

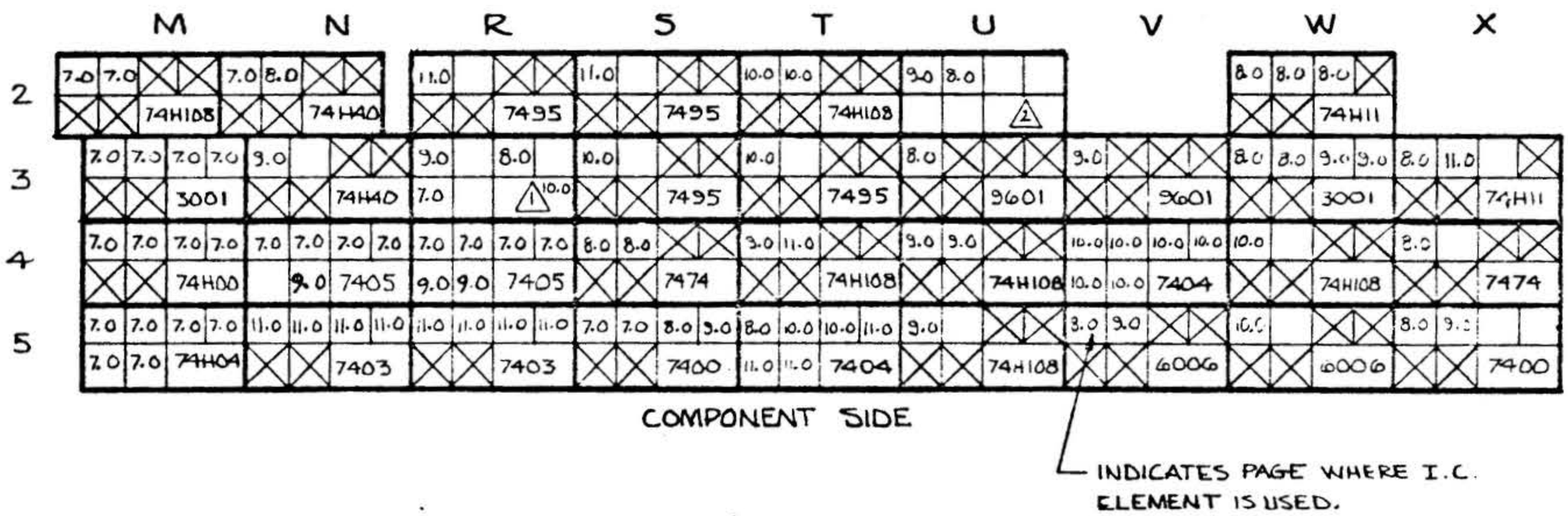

△1 RESISTOR ASSY 49A0025-000

△2 COMPONENT ASSY 01C0995-000

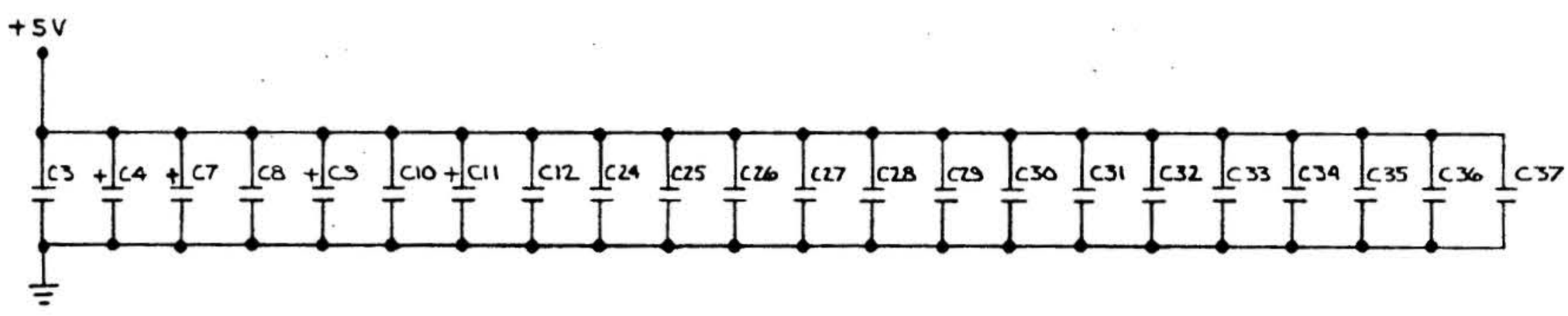

CAPACITORS C4,7,9,11 ARE 2.2 µF, 20V
CAPACITORS C3,8,10,12,24–37 ARE .1 µF, 100V

COMPONENENT MAP AND DECOUPLING

CODE IDENT NO.	SIZE	DWG NO	REV
21101	C	91C0219	G
SCALE		SHEET 3.0	

1/70 DIETERICH-POST CLEARPRINT 1000H-5

SOURCE	SIGNAL	DIST. POINT
N 3-7	GNDM2	M2-7
M3-7	GNDN2	N2-7
U3-7	GNDU3	U3-2, U3-1
V3-7	GNDV3	V3-2, V3-1

SOURCE	SIGNAL	DIST. POINT
M3-14	VCCM2	M2-14
N3-14	VCCN2	N2-14
U2-14	VCCU2	U2-8

POWER AND GRD WIRED DISTRIBUTION

CODE IDENT NO.	SIZE	DWG NO	REV
21101	C	91C0219	G
SCALE		SHEET 4.0	

1/70 DIETERICH-POST CLEARPRINT 1020H-C

CONNECTOR P1

PINS	FUNCTION	SHEET
1	+5V	
2	GRD	
3	+5V	
4	GRD	
5		
6		
7		
8		
9		
10		
11		
12		
13		
14		
15		
16		
17		
18		
19		
20		
21		
22		
23		
24		
25		
26		
27		
28		
29		
30		
31		
32		
33		
34		
35		
36		
37		
38		
39		
40		
41		

CONNECTOR P1

PINS	FUNCTION	SHEET
42		
43		
44		
45		
46		
47		
48		
49		
50		
51		
52		
53		
54		
55	AB00-C	11.0
56	AB01-C	11.0
57	AB02-C	11.0
58	AB03-C	11.0
59	AB04-C	11.0
60	AB05-C	11.0
61	AB06-C	11.0
62	AB07-C	11.0
63		
64		
65		
66		
67		
68		
69		
70		
71		
72		
73		
74		
75		
76		
77	+5V	
78	GRD	
79	+5V	
80	GRD	

CONNECTOR P2

PINS	FUNCTION	SHEET
1		
2		
3		
4		
5		
6		
7		
8		
9		
10		
11		
12		
13		
14		
15		
16		
17		
18		
19		
20		
21		
22		
23		
24		
25		
26		
27		
28		
29		
30		

CONNECTOR

CODE IDENT NO.	SIZE	DWG NO	REV
21101	C	9C0219	[illegible]
SCALE		SHEET [illegible]	

1/70 DIETERICH-POST CLEARPRINT 1000H-6

CONNECTOR P3

PINS	FUNCTION	SHEET
1	+5V	
2	GRD.	
3	+5V	
4	GRD.	
5		
6		
7		
8		
9	RDDX+	9.0
10	SDTØX-	9.0
11	WRDY-	8.0
12	RCLP+	9.0
13		
14	AB11-C	7.0
15		
16		
17	IUAX-C	7.0
18	DRYX-C	7.0
19		
20	FRYX-C	7.0
21		
22		
23	TTRX-I	11.0
24		
25		
26	WCKD+	8.0
27		
28		
29		
30		
31		
32		
33		
34	SERX-C	7.0
35	AB13-C	7.0
36	AB14-C	7.0
37	AB08-C	7.0
38	SYRT-C	7.0
39		
40		
41		

CONNECTOR P3

PINS	FUNCTION	SHEET
42		
43		
44		
45		
46		
47		
48		
49		
50		
51		
52		
53		
54		
55		
56		
57		
58		
59		
60	SDTIX-	7.0
61		
62		
63		
64		
65		
66		
67		
68		
69	IUAA-I	8.0
70	IUBB-I	9.0
71		
72		
73		
74		
75	TTDØ-	10.0
76		
77	+5V	
78	GRD.	
79	+5V	
80	GRD.	

CONNECTOR

CODE IDENT NO.	SIZE	DWG NO	REV
21101	C	91C0219	G
SCALE		SHEET 6.0	

1/78 DIETERICH-POST CLEARPRINT 1000H-G

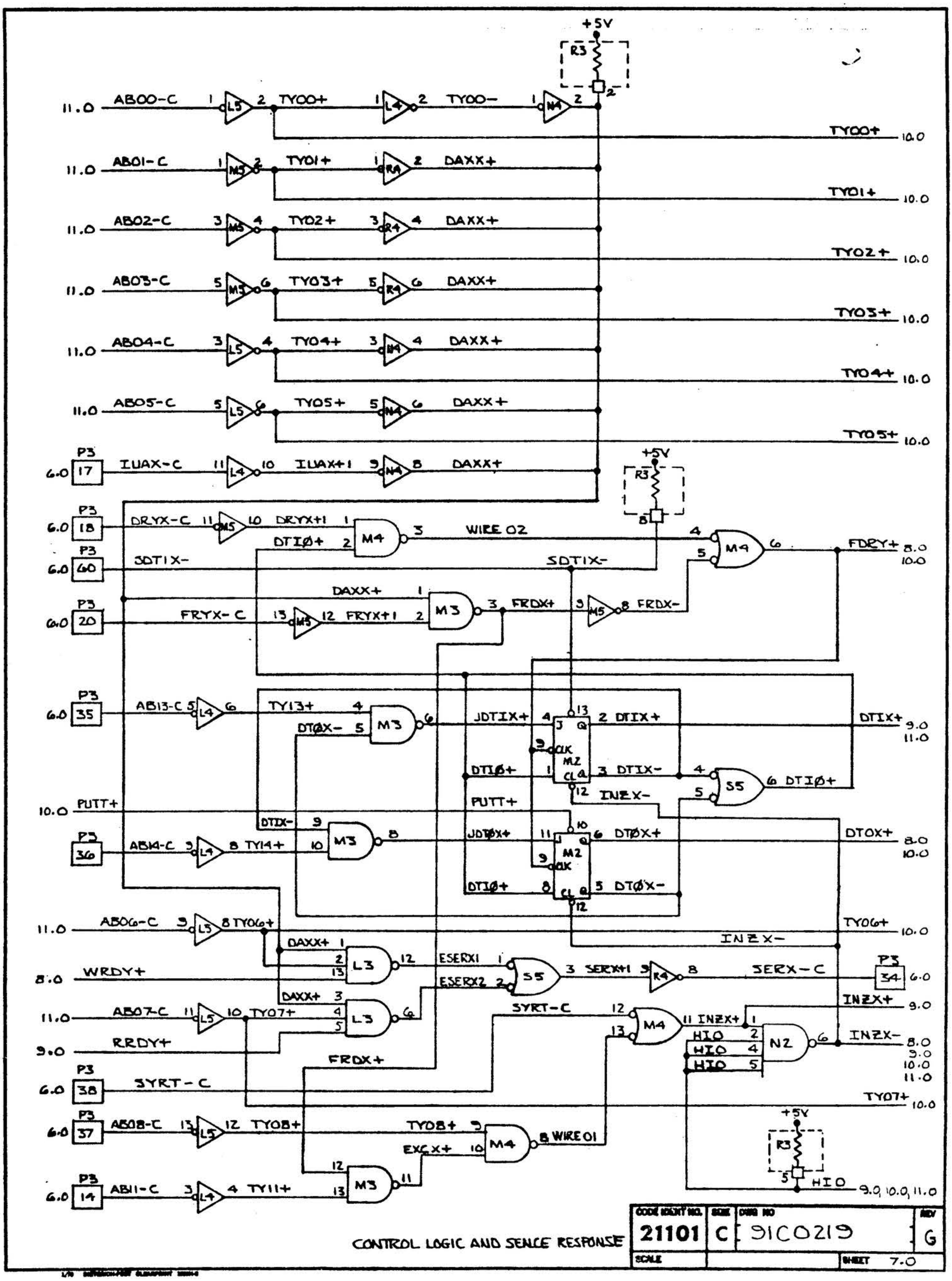
+5V
R3
AB00-C
TY00+
TY00-
TY00+
AB01-C
TY01+
DAXX+
TY01+
AB02-C
TY02+
DAXX+
TY02+
AB03-C
TY03+
DAXX+
TY03+
AB04-C
TY04+
DAXX+
TY04+
AB05-C
TY05+
DAXX+
TY05+
P3
17
IUAX-C
IUAX+1
DAXX+
P3
18
DRYX-C
DRYX+1
DTIØ+
WIRE 02
FDRY+
P3
60
SDTIX-
SDTIX-
DAXX+
P3
20
FRYX-C
FRYX+1
FRDX+
FRDX-
P3
35
AB13-C
TY13+
DTØX-
JDTIX+
DTIX+
DTIØ+
DTIX-
INEX-
DTIØ+
PUTT+
PUTT+
P3
36
AB14-C
TY14+
DTIX-
JDTØX+
DTØX+
DTOX+
DTIØ+
DTØX-
AB06-C
TY06+
INEX-
TY06+
DAXX+
WRDY+
ESERX1
ESERX2
SERX+1
SERX-C
P3
34
DAXX+
AB07-C
TY07+
SYRT-C
INEX+
RRDY+
HIO
HIO
HIO
INEX-
FRDX+
P3
38
SYRT-C
TY07+
P3
37
AB08-C
TY08+
TY08+
WIRE 01
EXCX+
P3
14
AB11-C
TY11+
HIO
CONTROL LOGIC AND SENCE RESPONSE
CODE IDENT NO.
21101
SIZE
C
DWG NO
91C0219
REV
G
SCALE
SHEET
7.0

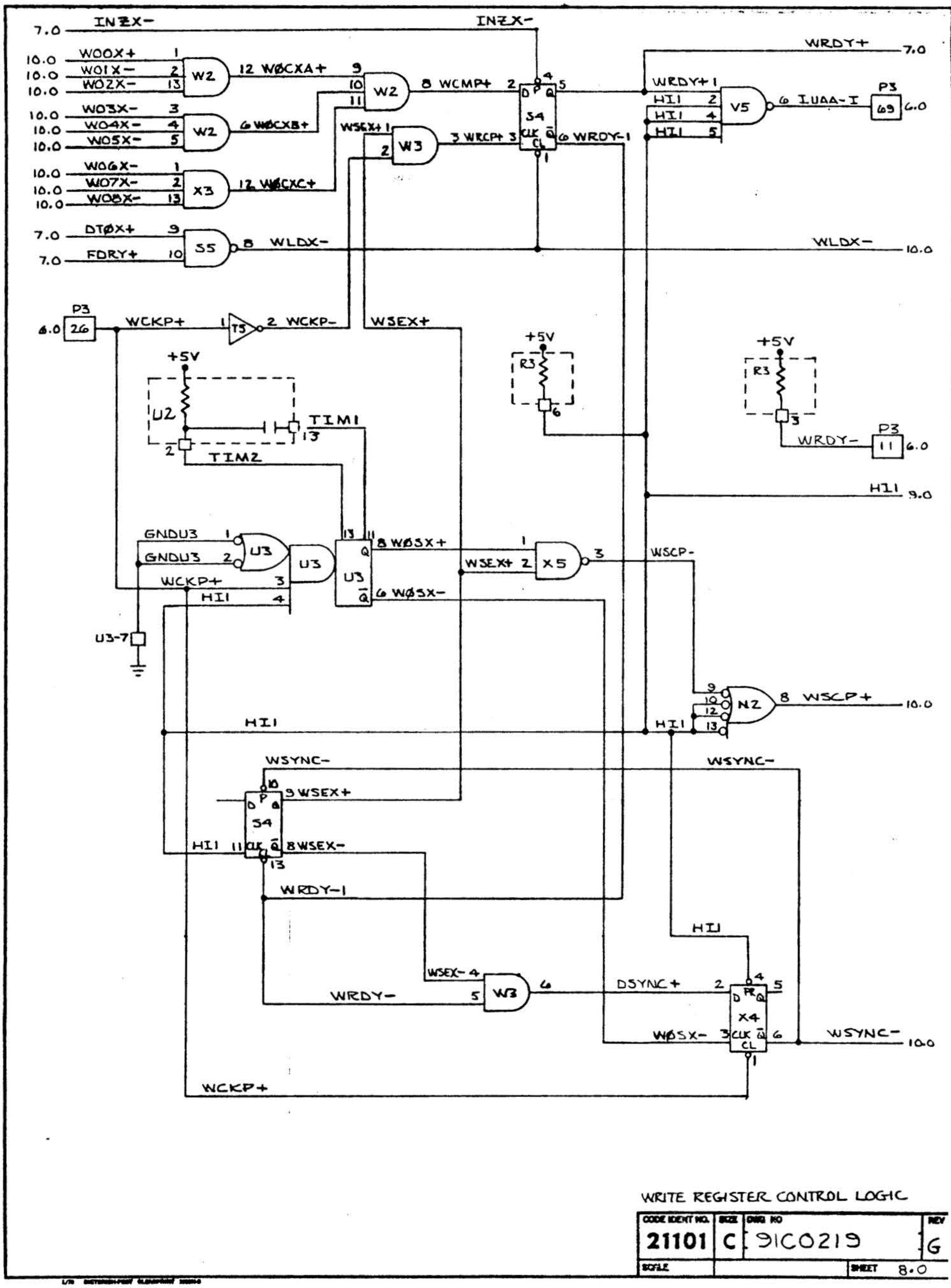

WRITE REGISTER CONTROL LOGIC

CODE IDENT NO.	SIZE	DWG NO	REV
21101	C	91C0219	G
SCALE		SHEET 8.0	

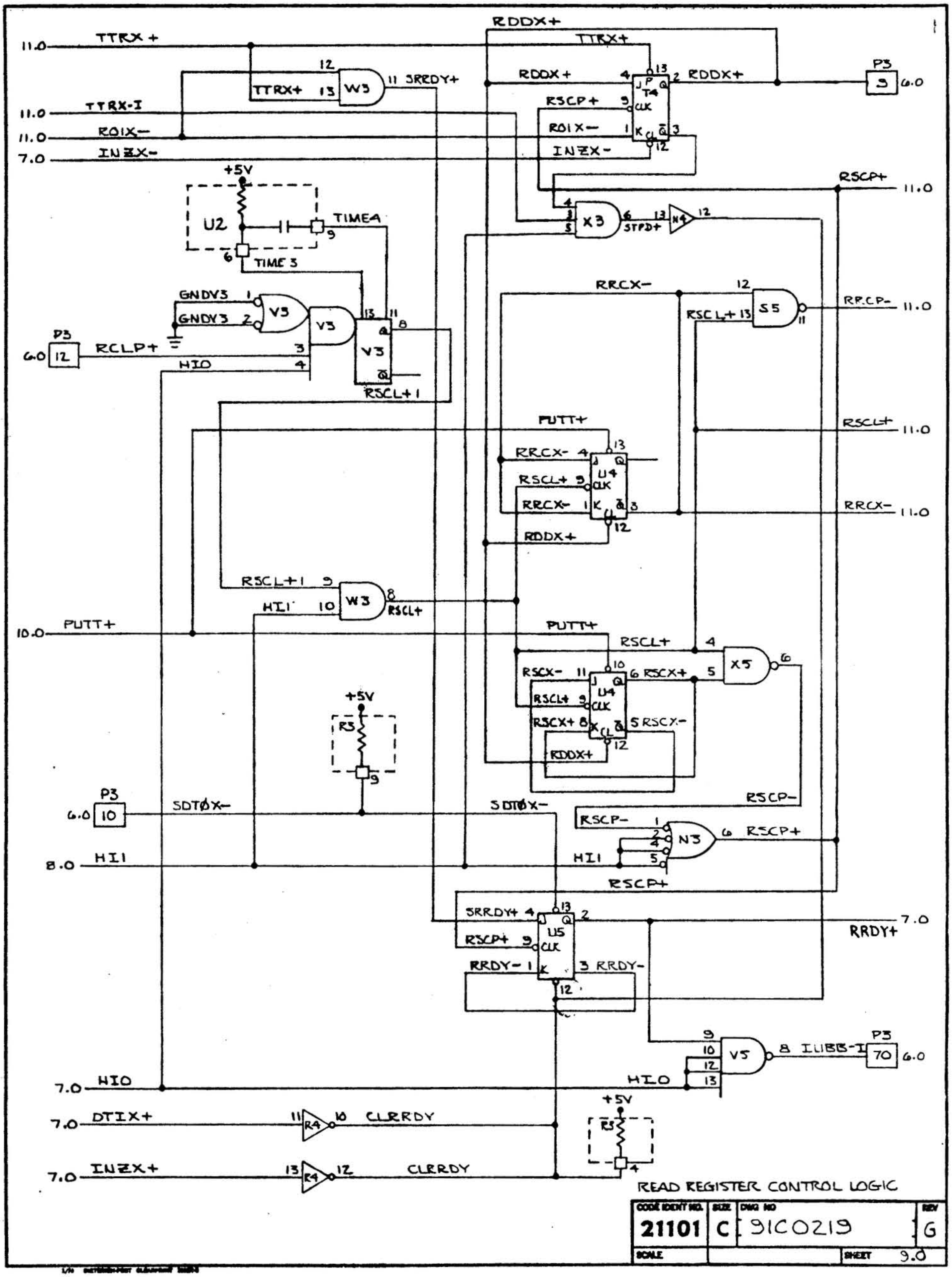
TTRX+
RDDX+
RSCP+
RDIX-
INZX-
SRRDY+
TIMEA
TIME 3
GNDV3
RCLP+
HIO
RSCL+1
RSCL+
PUTT+
RRCX-
RSCX-
RSCX+
SDTØX-
HI1
RSCP-
RRDY+
RRDY-
ILLBB-I
HILO
DTIX+
INZX+
CLRRDY
READ REGISTER CONTROL LOGIC
21101
C
9IC0219
G
9.0

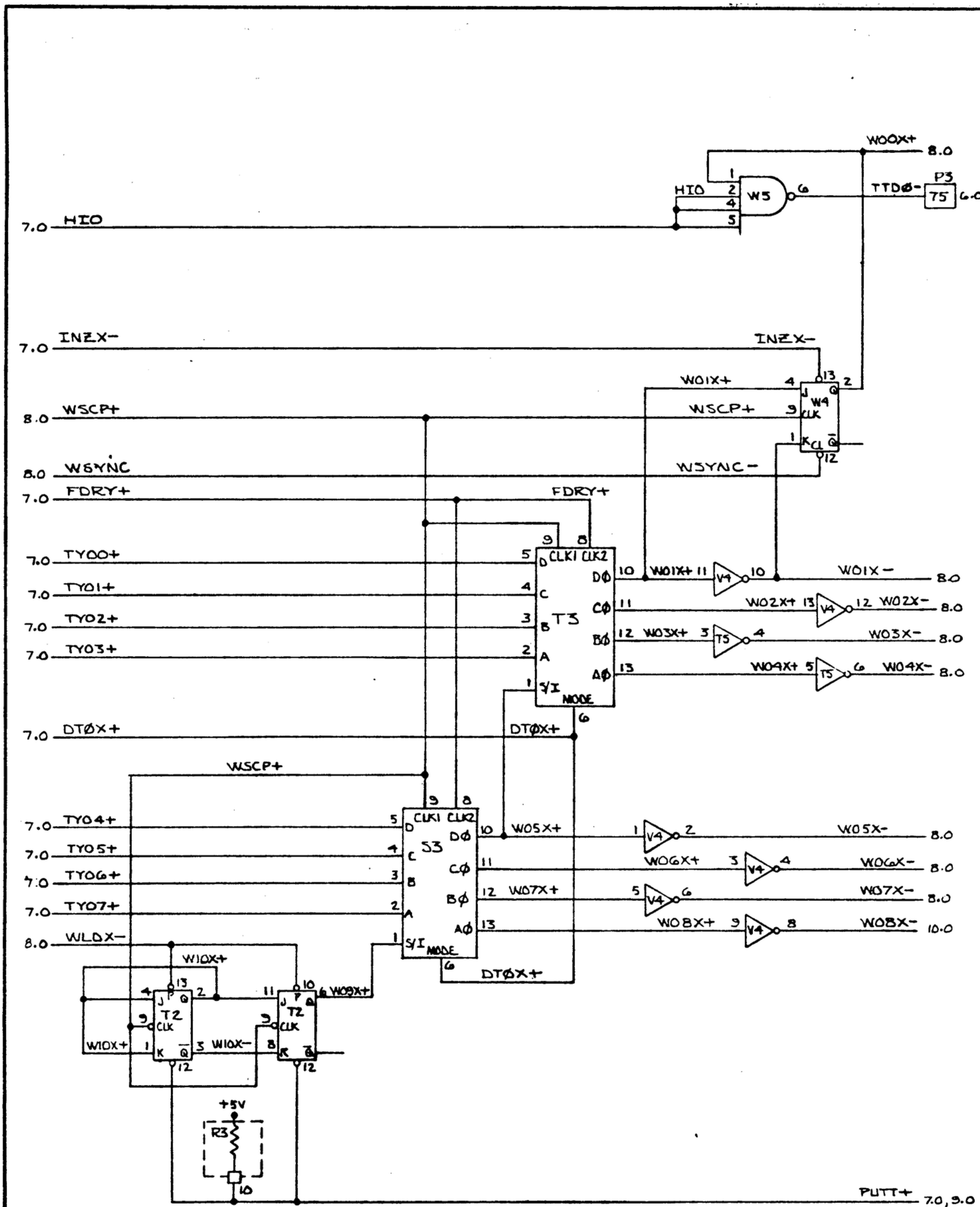

WRITE REGISTER

CODE IDENT NO.	SIZE	DWG NO	REV
21101	C	91C0219	G
SCALE		SHEET 10.0	

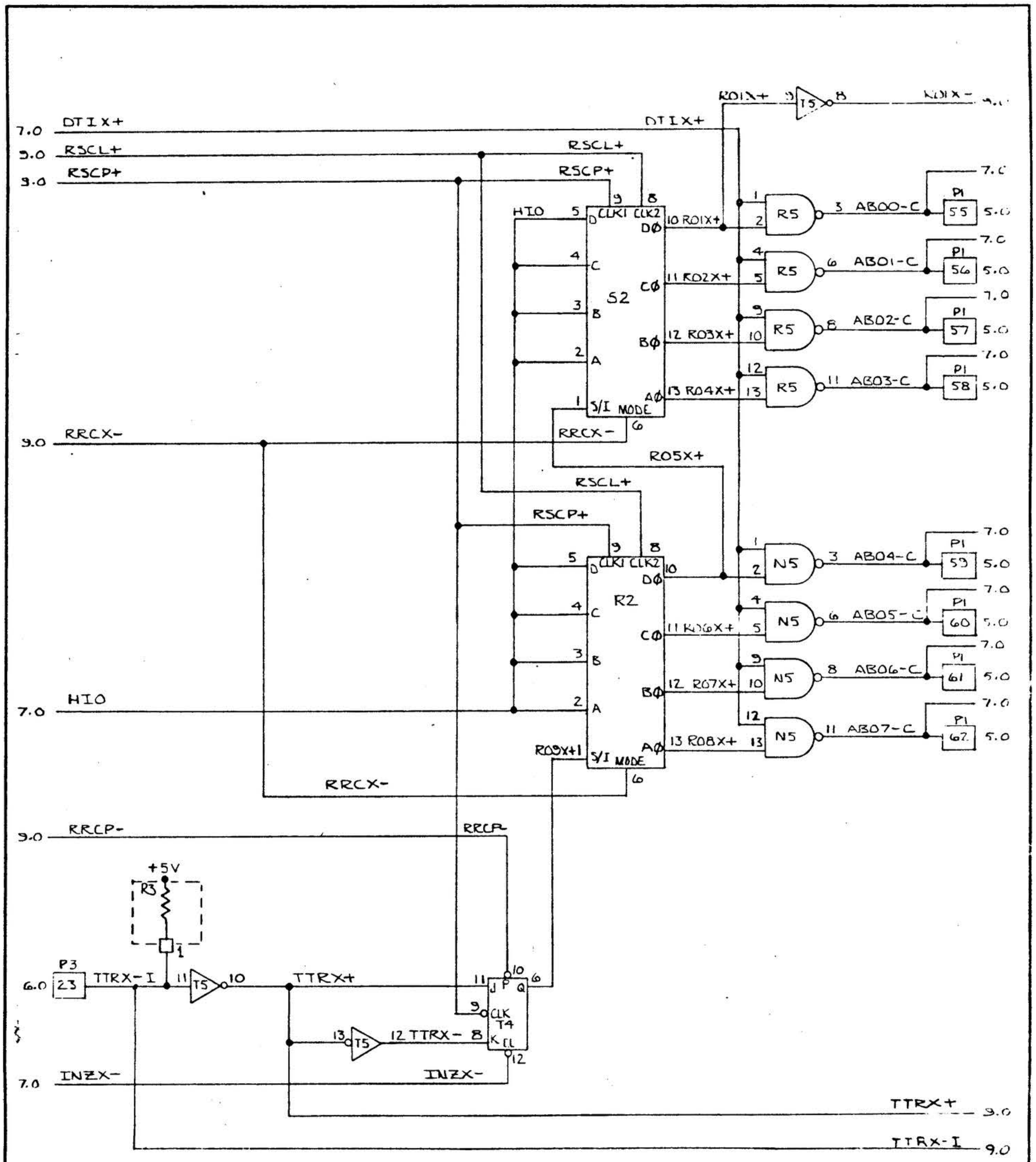

READ REGISTEK

CODE IDENT NO.	SIZE	DWG NO	REV
21101	C	91C0219	G
SCALE		SHEET 11.0	

1/70 DIETERICH-POST CLEARPRINT

varian data machines
a varian subsidiary

DWG. NO. 44P0451

PARTS LIST

CODE IDENT 21101

QUANTITY REQ'D PER DASH NO							FIND NO	PART NUMBER	DESCRIPTION	REMARKS	ZONE
				002	001	000					
				REF	REF	REF	–	44D0451 E	ASSEMBLY		
				REF	–	REF	–	95W0606 F	WIRE LIST		
				REF	REF	–	–	95W0723 A	WIRE LIST		
				REF	–	REF	–	91C0219 G	LOGIC DIAGRAM		
				REF	REF	–	–	91C0261 A	LOGIC DIAGRAM		
				1	1	1	1	40D0458-000	P.W. BOARD		
				31	14	18	2	71A0004-100	CAPACITOR .1 µf		
				6	3	4	3	71N0200-225	CAPACITOR 2.2 µf		
				6	–	6	4	49A0099-000	I.C. SN74H108N		
				2	–	2	5	49A0019-000	I.C. SN74H40N		
				6	2	4	6	49A0090-001	I.C. SN7495N		
				3	1	2	7	49A0022-000	I.C. SN74H11N		
				1	–	1	8	49A0009-000	I.C. SN15862N		
				3	1	2	9	49A0104-000	I.C. MC3001P		
				2	1	1	10	49A0025-000	RESISTOR ASSY		
				2	–	2	11	49A0146-000	I.C. U6E960129		
				6	2	4	12	49A0040-000	I.C. SN7404N		
				1	–	1	13	49A0039-000	I.C. SN74H00N		

NEXT ASSY 01A0951 | MODEL NO 620/f-15 | APPD [illegible]

TITLE: PARTS LIST
TTY/ABL CONTROLLER ASSY

REV	A	B	C	D	E	F	G	H	J	K	L
EN NO	4847	4913	5007	5082	5152	5246	5269	5340	80006	80695	[illegible]
DATE	10-[illegible]	11-23-70	1-11-71	1-11-71	1-11-71	4-21-71	4-21-71	4-21-71	12-[illegible]-71	7/16/72	[illegible]
DR	J.Z.	GRL	DM	D.W.	[illegible]	JM	JM	JM	[illegible]	[illegible]	[illegible]
CHK	EB	RAD	RAD	[illegible]	[illegible]	WKO 4/29/71	WKO 4/29/71	WKO 4/29/71	[illegible]	[illegible]	[illegible]

DWG NO 44P0451 | REV L

SHEET 1 OF 2

6A0017-000B

varian data machines
a varian subsidiary

DWG. NO. 44P0451

PARTS LIST

CODE IDENT: 21101

QUANTITY REQ'D PER DASH NO							FIND NO	PART NUMBER	DESCRIPTION	REMARKS	ZONE
				002	001	000					
				4	2	2	14	49A0575-000	I.C. SN7405J		
				4	2	2	15	49A0012-000	I.C. SN7474N		
				1	-	1	16	49A0023-000	I.C. SN74H04N		
				9	7	2	17	49A0081-001	I.C. SN7403N		
				2	-	2	18	49A0010-000	I.C. SN6006N		
				3	1	2	19	49A0007-000	I.C. SN7400N		
				1	-	1	20	01C0995-000	COMPONENT ASSY		
				59	22	37	21	58A0060-000	SOCKET, 14 PIN		
				2	2	-	22	58A0060-001	SOCKET, 16 PIN		
							23				
				174	72	174	24	58A0062-002	POST, WIRE WRAP		
				1	1	1	25	16S1057-061	CARD HANDLE		
				0	0	0	26	53A0333-040	WIRE, KYNAR, YEL	30 AWG	
				1	1	1	27	16S1057-056	CARD HANDLE		
				2	2	-	28	49A0112-000	I.C. SN7493N		
				1	1	-	29	49A0041-000	I.C. SN74H51N		

NOTES:

DWG NO 44P0451

REV L

SHEET 2 OF 2

96A0017-001B