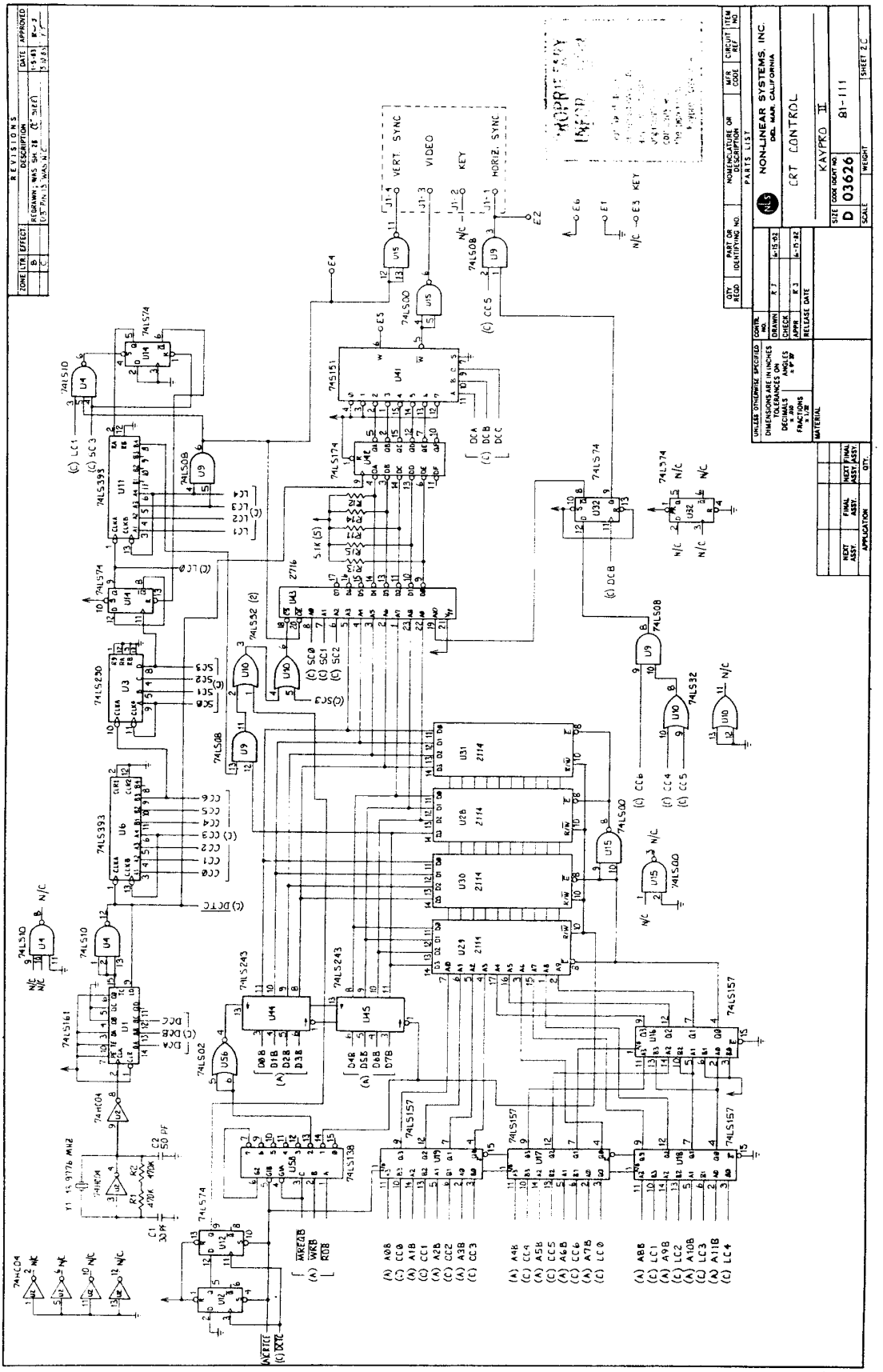
NON-LINEAR SYSTEMS, INC.
DEL MAR, CALIFORNIA
CRT CONTROL
KAYPRO II
D 03626
81-111
SHEET 2C
REVISIONS
VERT. SYNC
VIDEO
KEY
HORIZ. SYNC