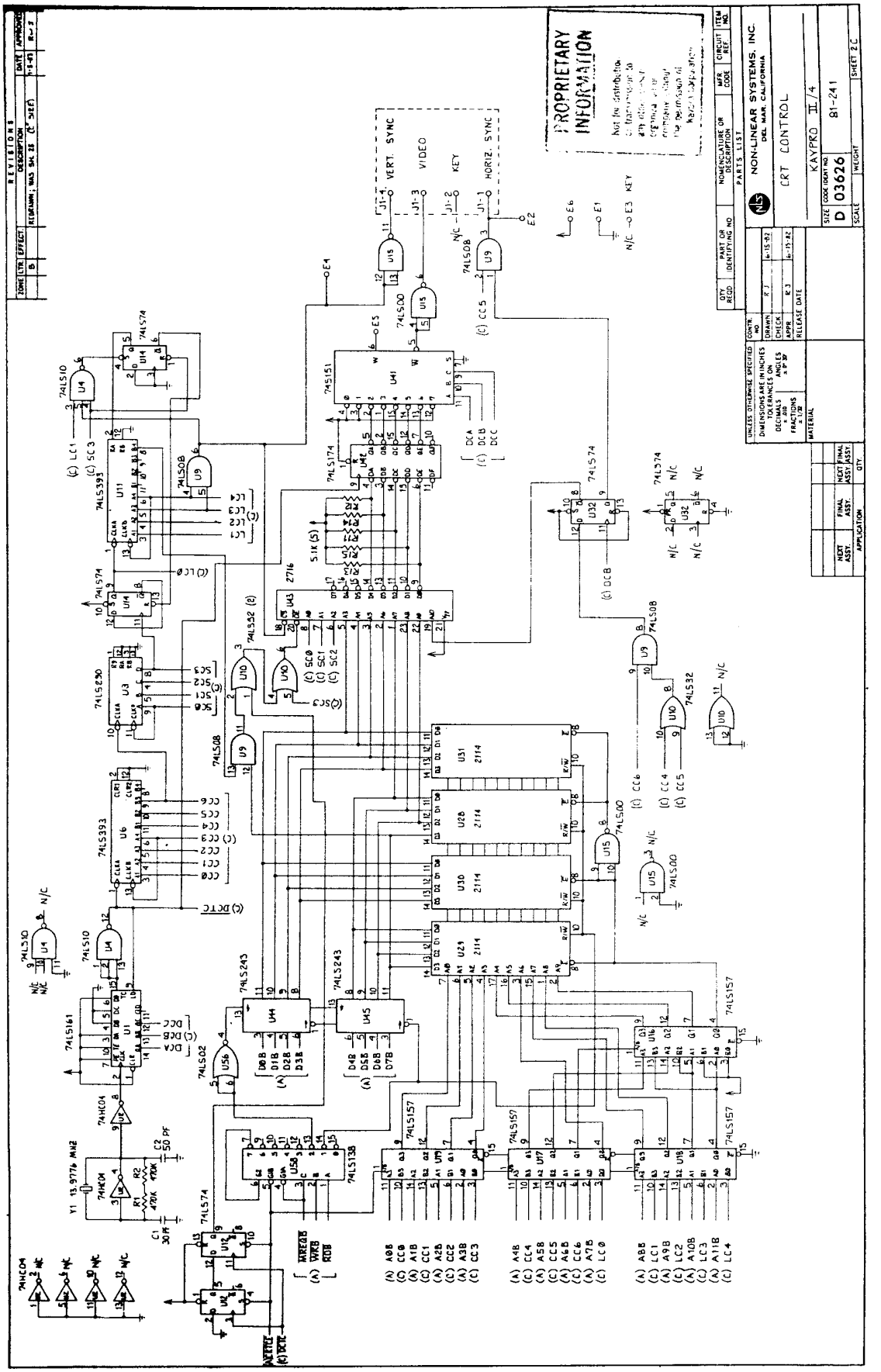
PROPRIETARY INFORMATION
NON-LINEAR SYSTEMS, INC.
DEL MAR, CALIFORNIA
CRT CONTROL
KAYPRO II/4
D 03626
81-241
SHEET 2C
REVISIONS
VERT. SYNC
VIDEO
KEY
HORIZ. SYNC
74LS174
74LS393
74LS151
74LS157
74LS243
74LS138
74LS00
74LS08
74LS32
74LS10
74LS161
74HC04
74LS02
74LS174
2716
2114
Y1 13.9776 MHZ