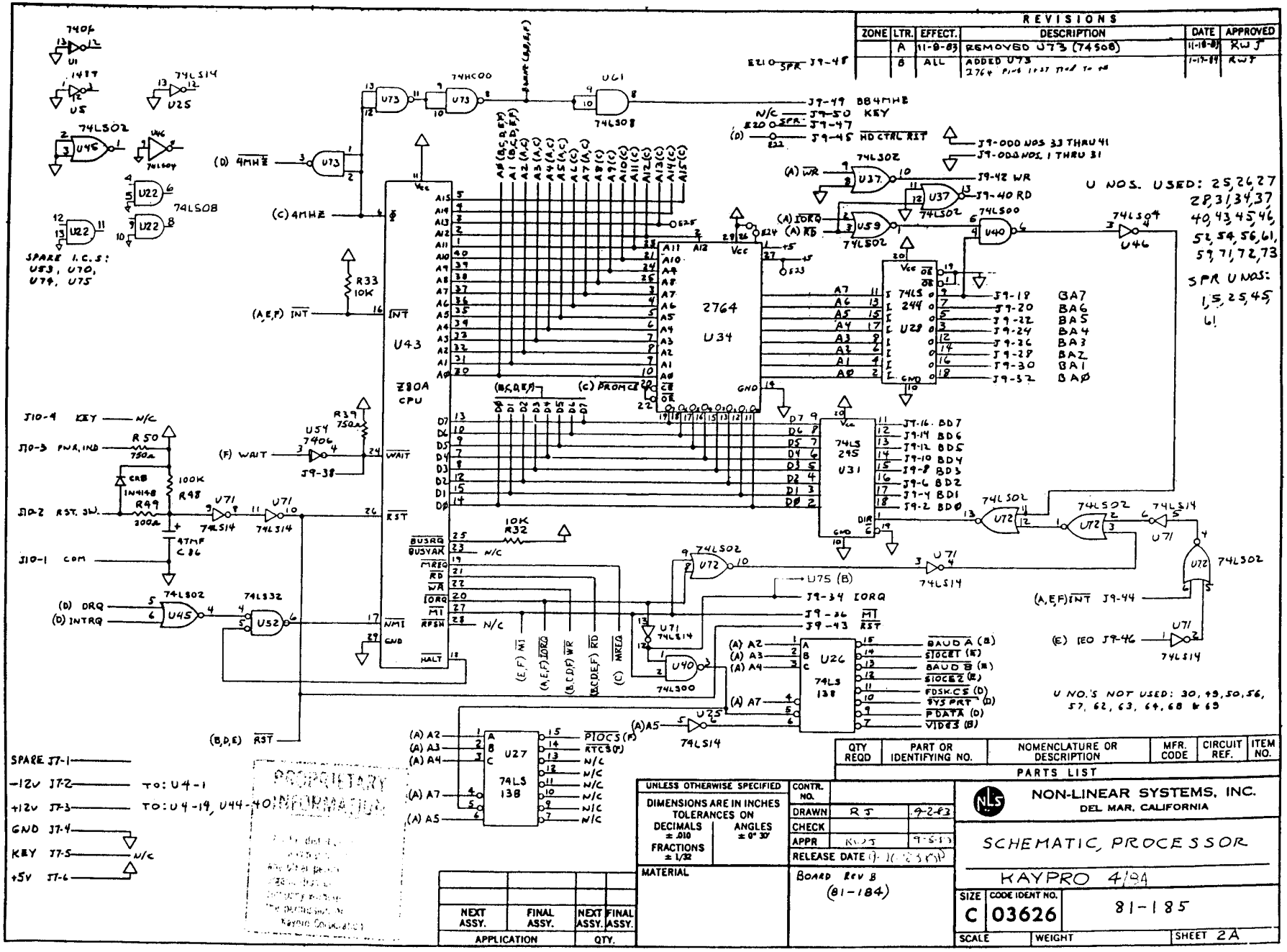
REVISIONS
ZONE | LTR. | EFFECT. | DESCRIPTION | DATE | APPROVED
A | 11-8-83 | REMOVED U73 (74S08) | 11-18-83 | RWJ
B | ALL | ADDED U73 2764 PINS 1 & 27 TIED TO +5 | 1-17-84 | RWJ
U NOS. USED: 25,26,27 28,31,34,37 40,43,45,46 52,54,56,61 59,71,72,73
SPR U NOS: 1,5,25,45 61
U NO.'S NOT USED: 30,49,50,56, 57,62,63,64,68 & 69
SPARE I.C.S: U53, U70, U74, U75
Z80A CPU
U43
2764
U34
74LS 244
U28
74LS 245
U31
74LS 138
U26
74LS 138
U27
74LS08
74HC00
74LS02
74LS14
74LS00
74LS04
74LS32
74LS 04
J9-49 BB4MHZ
J9-50 KEY
J9-47
J9-45 HD CTRL RST
J9-42 WR
J9-40 RD
J9-18 BA7
J9-20 BA6
J9-22 BA5
J9-24 BA4
J9-26 BA3
J9-28 BA2
J9-30 BA1
J9-32 BA0
J9-16 BD7
J9-14 BD6
J9-12 BD5
J9-10 BD4
J9-8 BD3
J9-6 BD2
J9-4 BD1
J9-2 BD0
J9-34 IORQ
J9-36 M1
J9-43 RST
J9-44
J9-46
J10-4 KEY
J10-3 PWR IND
J10-2 RST. SW.
J10-1 COM
(D) DRQ
(D) INTRQ
(F) WAIT
(A,E,F) INT
(E) IEO
(B,D,E) RST
SPARE J7-1
-12V J7-2 TO: U4-1
+12V J7-3 TO: U4-19, U44-40
GND J7-4
KEY J7-5
+5V J7-6
PROPRIETARY INFORMATION
QTY REQD | PART OR IDENTIFYING NO. | NOMENCLATURE OR DESCRIPTION | MFR. CODE | CIRCUIT REF. | ITEM NO.
PARTS LIST
UNLESS OTHERWISE SPECIFIED
DIMENSIONS ARE IN INCHES
TOLERANCES ON
DECIMALS ± .010
FRACTIONS ± 1/32
ANGLES ± 0° 30'
MATERIAL
CONTR. NO.
DRAWN RJ 9-2-83
CHECK
APPR RWJ 9-5-83
RELEASE DATE
BOARD REV B (81-184)
NEXT ASSY. | FINAL ASSY. | NEXT ASSY. | FINAL ASSY.
APPLICATION | QTY.
NON-LINEAR SYSTEMS, INC.
DEL MAR, CALIFORNIA
SCHEMATIC, PROCESSOR
KAYPRO 4/84
SIZE C | CODE IDENT NO. 03626 | 81-185
SCALE | WEIGHT | SHEET 2A