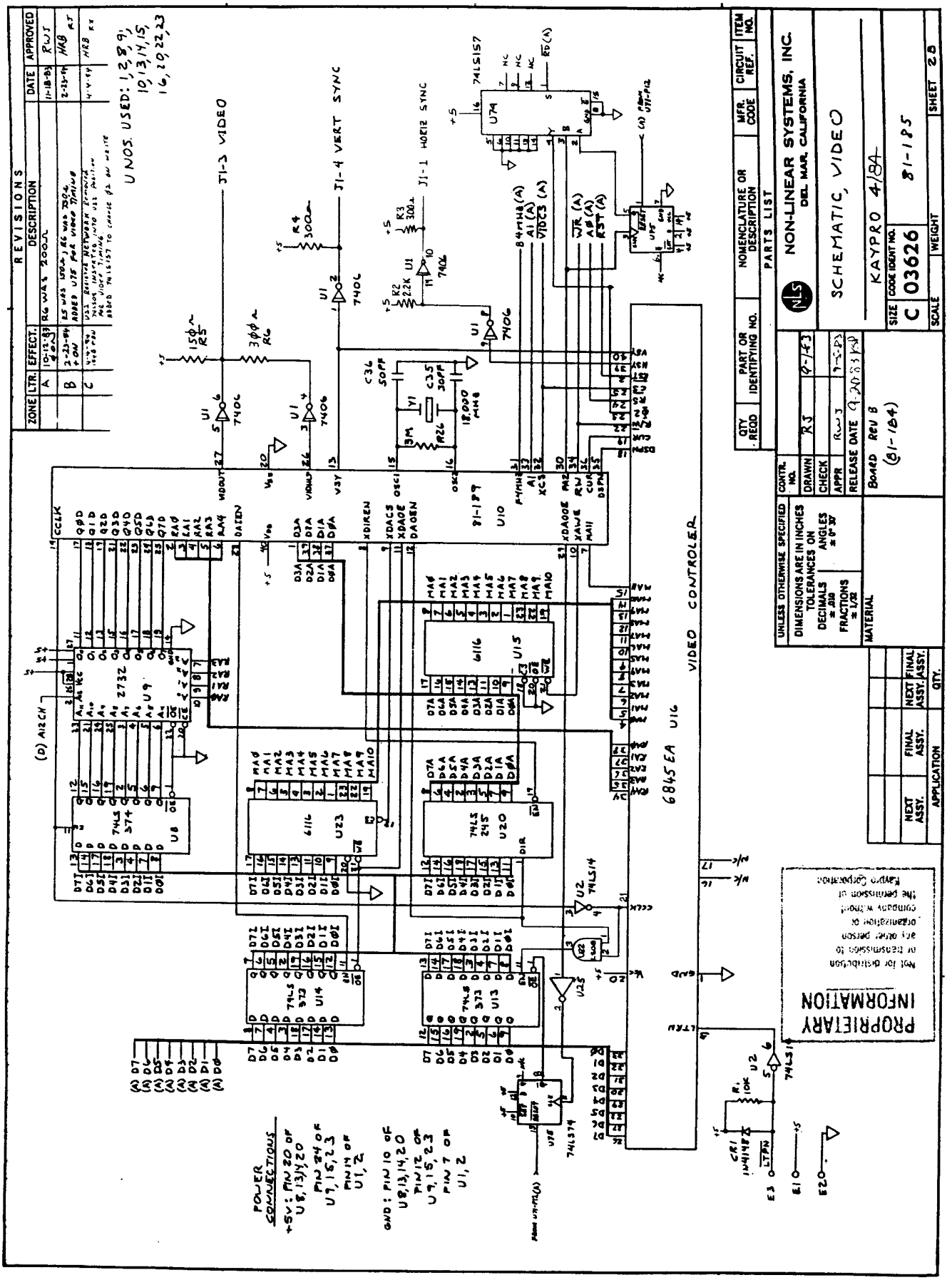
REVISIONS
ZONE LTR. EFFECT. DESCRIPTION DATE APPROVED
A 10-12-83 R6 WAS 200Ω 11-18-83 RWJ
B 2-23-84 ADDED U75 FOR VIDEO TIMING 2-23-84 HRB
C 4-4-84 HRB
UNOS. USED: 1,2,8,9, 10,13,14,15, 16,20,22,23
J1-3 VIDEO
J1-4 VERT SYNC
J1-1 HORIZ SYNC
VIDEO CONTROLER
6845 EA U16
POWER CONNECTIONS
+5V: PIN 20 OF U8,13,14,20
PIN 24 OF U9,15,23
PIN 14 OF U1,2
GND: PIN 10 OF U8,13,14,20
PIN 12 OF U9,15,23
PIN 7 OF U1,2
PROPRIETARY INFORMATION
Not for distribution or transmission to any other person organization or company without the permission of Kaypro Corporation
NON-LINEAR SYSTEMS, INC.
DEL MAR, CALIFORNIA
SCHEMATIC, VIDEO
KAYPRO 4/84
C 03626 81-185
SHEET 28
PARTS LIST
QTY REQD
PART OR IDENTIFYING NO.
NOMENCLATURE OR DESCRIPTION
MFR. CODE
CIRCUIT REF.
ITEM NO.
UNLESS OTHERWISE SPECIFIED
DIMENSIONS ARE IN INCHES
TOLERANCES ON
DECIMALS ±.010
ANGLES ±0°30'
FRACTIONS ±1/32
MATERIAL
CONTR. NO.
DRAWN RJ
CHECK
APPR
RELEASE DATE
BOARD REV B (81-184)
NEXT ASSY.
FINAL ASSY.
APPLICATION
QTY.