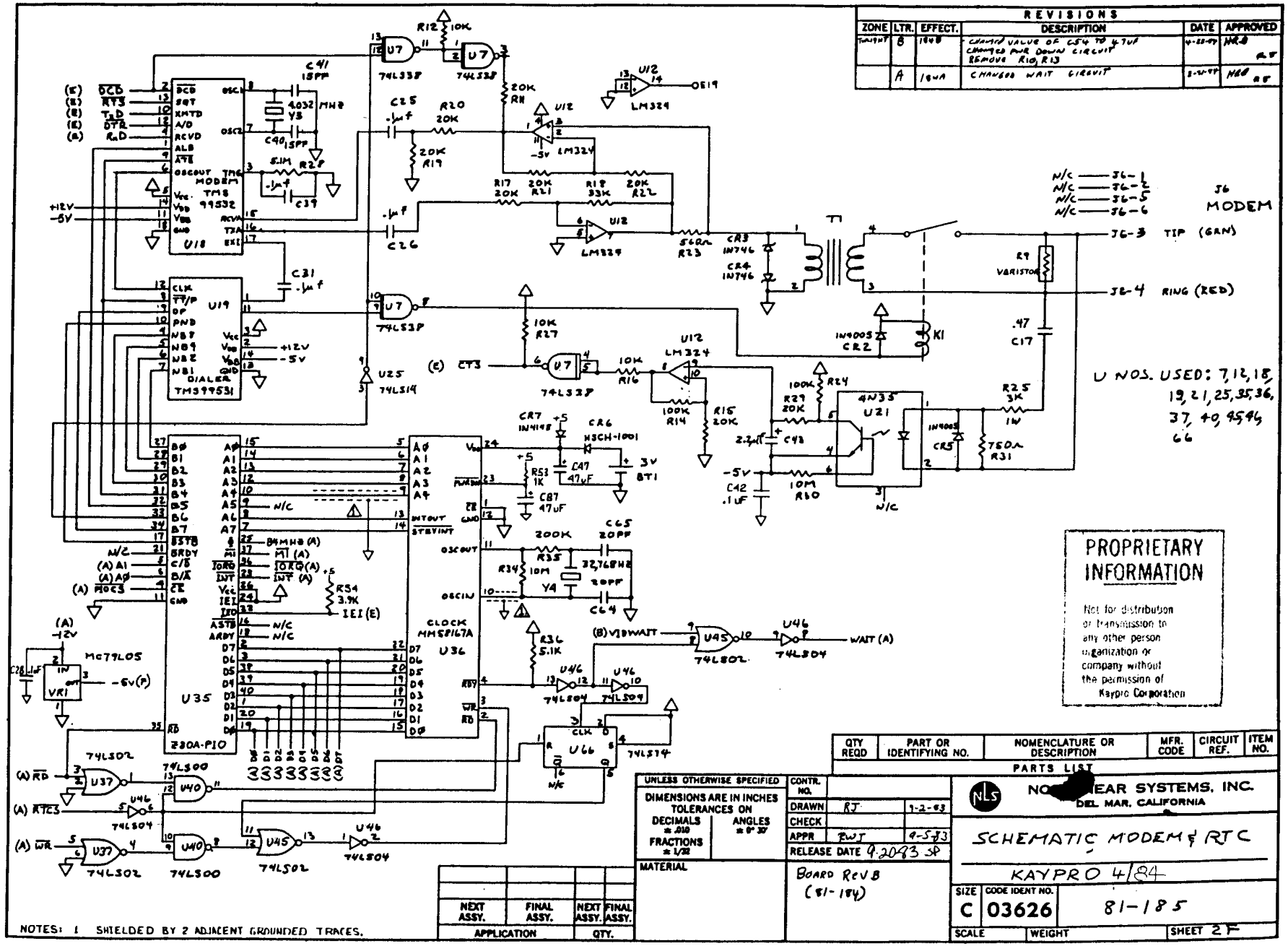
REVISIONS
ZONE | LTR. | EFFECT. | DESCRIPTION | DATE | APPROVED
B | 1848 | CHANGED VALUE OF C54 TO 47uF CHANGED PWR DOWN CIRCUIT REMOVE R10, R13
A | 1848 | CHANGED WAIT CIRCUIT
J6 MODEM
J6-3 TIP (GRN)
J6-4 RING (RED)
U NOS. USED: 7, 12, 18, 19, 21, 25, 35, 36, 37, 40, 45, 46, 66
PROPRIETARY INFORMATION
Not for distribution or transmission to any other person organization or company without the permission of Kaypro Corporation
MODEM TMS 99532 U18
DIALER TMS99531 U19
Z80A-PIO U35
CLOCK MM58167A U36
MC79L05 VR1
74LS38
74LS14
74LS02
74LS00
74LS04
74LS74
LM324
4N35 U21
T1
K1
Y3 4.032 MHz
Y4 32,768 HZ
BT1 3V
VARISTOR
QTY REQD | PART OR IDENTIFYING NO. | NOMENCLATURE OR DESCRIPTION | MFR. CODE | CIRCUIT REF. | ITEM NO.
PARTS LIST
UNLESS OTHERWISE SPECIFIED
DIMENSIONS ARE IN INCHES
TOLERANCES ON
DECIMALS ± .010
ANGLES ± 0° 30'
FRACTIONS ± 1/32
MATERIAL
CONTR. NO.
DRAWN RJ 9-2-83
CHECK
APPR RWJ 9-5-83
RELEASE DATE 9-20-83 SP
BOARD REV B (81-184)
NEXT ASSY. | FINAL ASSY. | NEXT ASSY. | FINAL ASSY.
APPLICATION | QTY.
NOTES: 1 SHIELDED BY 2 ADJACENT GROUNDED TRACES.
NOTE: NEAR SYSTEMS, INC.
DEL MAR, CALIFORNIA
SCHEMATIC MODEM & RTC
KAYPRO 4/84
SIZE C | CODE IDENT NO. 03626 | 81-185
SCALE | WEIGHT | SHEET 2F