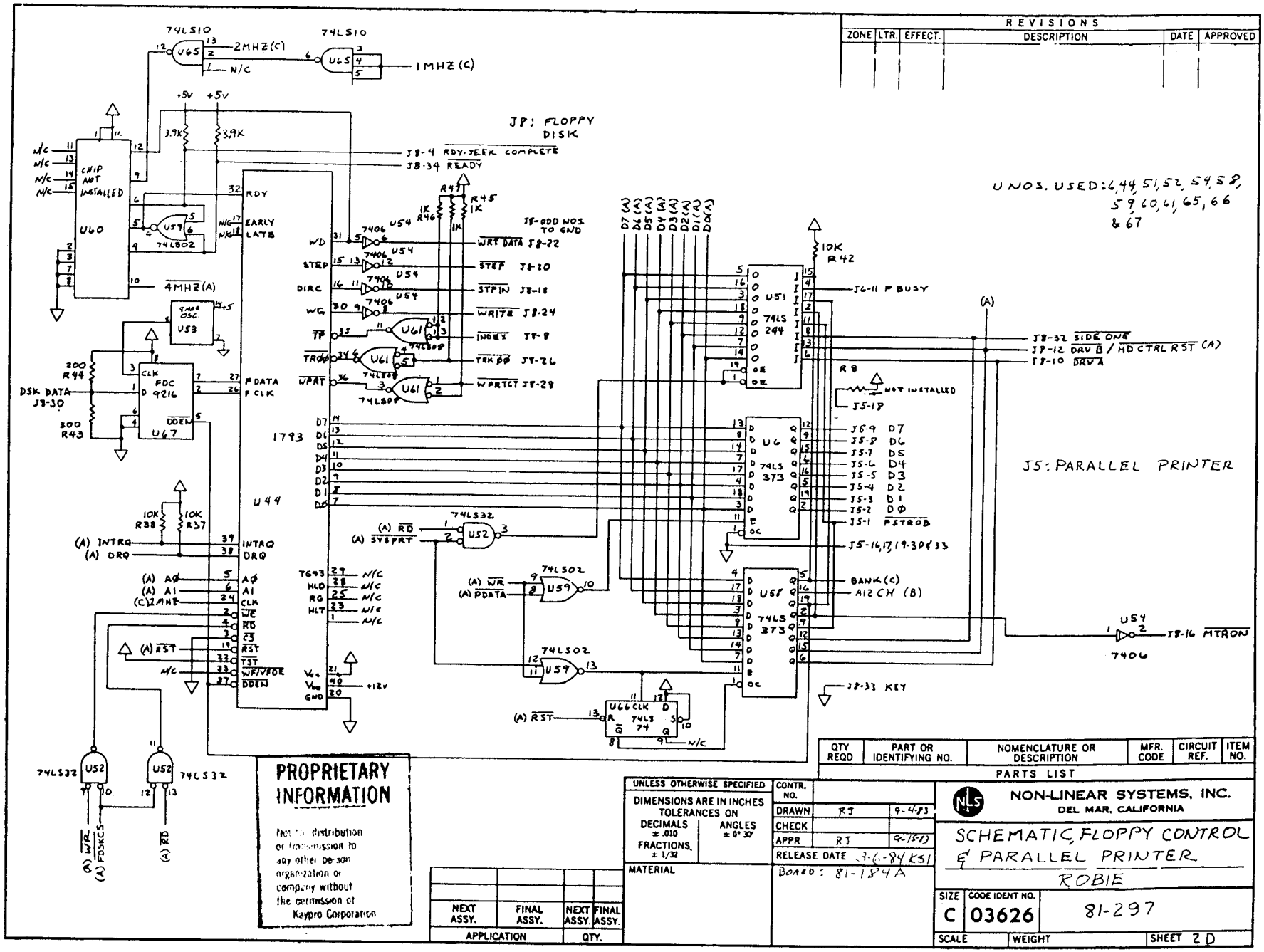

REVISIONS
ZONE LTR. EFFECT. DESCRIPTION DATE APPROVED
J8: FLOPPY DISK
J8-4 RDY-SEEK COMPLETE
J8-34 READY
J8-ODD NOS TO GND
WRT DATA J8-22
STEP J8-20
STPIN J8-18
WRITE J8-24
INDEX J8-8
TRK ØØ J8-26
WPRTCT J8-28
J8-32 SIDE ONE
J8-12 DRV B / HD CTRL RST (A)
J8-10 DRV A
J6-11 P BUSY
J5: PARALLEL PRINTER
J5-9 D7
J5-8 D6
J5-7 D5
J5-6 D4
J5-5 D3
J5-4 D2
J5-3 D1
J5-2 DØ
J5-1 PSTROB
J5-16,17,19-30 & 33
BANK (C)
A12 CH (B)
J8-33 KEY
J8-16 MTRON
U NOS. USED: 6, 44, 51, 52, 54, 58, 59, 60, 61, 65, 66 & 67
CHIP NOT INSTALLED
U60
74LS10
74LS02
74LS32
74LS244
74LS373
74LS74
74LS08
7406
1793
U44
FDC 9216
U67
U53
U51
U6
U68
U66
U54
U59
U52
U61
2MHZ (C)
1MHZ (C)
4MHZ (A)
DSK DATA J8-30
INTRQ
DRQ
RDY
EARLY
LATE
WD
STEP
DIRC
WG
TP
TRKØØ
WPRT
F DATA
F CLK
DDEN
WE
RD
CS
RST
TST
WF/VFOE
CLK
A0
A1
D7
D6
D5
D4
D3
D2
D1
DØ
TG43
HLD
RG
HLT
Vcc
VDD
GND
+12V
+5V
3.9K
1K
10K
300
NOT INSTALLED
PROPRIETARY INFORMATION
Not for distribution or transmission to any other person organization or company without the permission of Kaypro Corporation
UNLESS OTHERWISE SPECIFIED
DIMENSIONS ARE IN INCHES
TOLERANCES ON
DECIMALS ± .010
ANGLES ± 0° 30'
FRACTIONS ± 1/32
MATERIAL
CONTR. NO.
DRAWN RJ 9-4-83
CHECK
APPR RJ 9-15-83
RELEASE DATE 3-6-84 KSI
BOARD: 81-184A
NEXT ASSY. FINAL ASSY. NEXT ASSY. FINAL ASSY.
APPLICATION QTY.
QTY REQD PART OR IDENTIFYING NO. NOMENCLATURE OR DESCRIPTION MFR. CODE CIRCUIT REF. ITEM NO.
PARTS LIST
NON-LINEAR SYSTEMS, INC.
DEL MAR, CALIFORNIA
SCHEMATIC, FLOPPY CONTROL & PARALLEL PRINTER
ROBIE
SIZE C CODE IDENT NO. 03626 81-297
SCALE WEIGHT SHEET 2 D