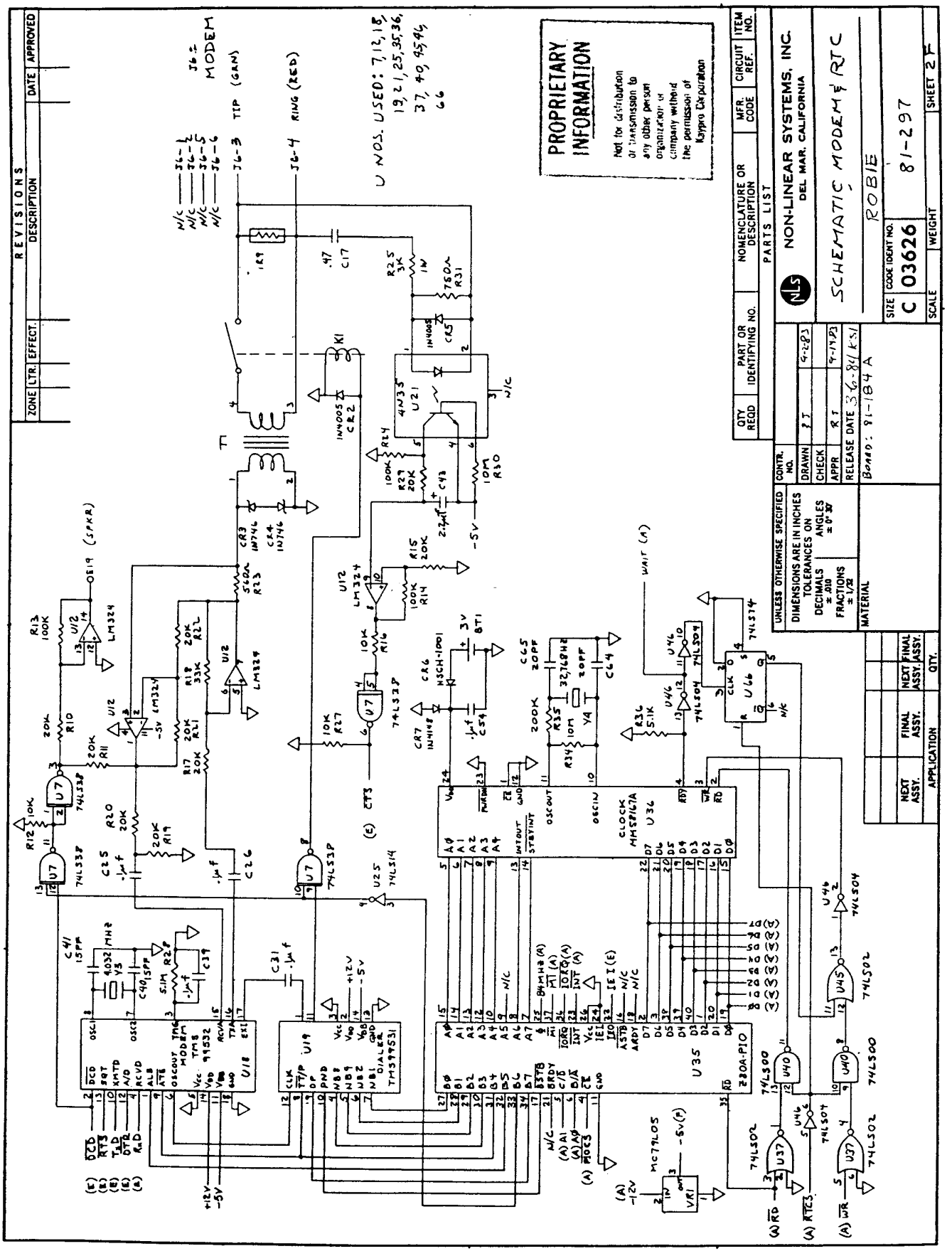
REVISIONS
ZONE
LTR.
EFFECT.
DESCRIPTION
DATE
APPROVED
PROPRIETARY INFORMATION
Not for distribution or transmission to any other person organization or company without the permission of Kaypro Corporation
U NOS. USED: 7, 12, 18, 19, 21, 25, 35, 36, 37, 40, 45, 46, 66
J6 = MODEM
J6-3 TIP (GRN)
J6-4 RING (RED)
QTY REQD
PART OR IDENTIFYING NO.
NOMENCLATURE OR DESCRIPTION
MFR. CODE
CIRCUIT REF.
ITEM NO.
PARTS LIST
NON-LINEAR SYSTEMS, INC.
DEL MAR, CALIFORNIA
SCHEMATIC, MODEM & RTC
ROBIE
SIZE C
CODE IDENT NO. 03626
81-297
SCALE
WEIGHT
SHEET 2F
UNLESS OTHERWISE SPECIFIED
DIMENSIONS ARE IN INCHES
TOLERANCES ON
DECIMALS ± .010
FRACTIONS ± 1/32
ANGLES ± 0° 30'
MATERIAL
CONTR. NO.
DRAWN
CHECK
APPR
RELEASE DATE 36-84 KSI
BOARD: 81-184 A
NEXT ASSY.
FINAL ASSY.
APPLICATION
QTY.
U18
U19
U35
U36
U21
U46
U45
U40
U37
U66
U25
U7
U12
LM324
74LS38
74LS14
74LS04
74LS00
74LS02
74LS74
Z80A-PIO
CLOCK MM58167A
MC79L05
VR1
+12V
-5V
-12V
WAIT (A)
(SPKR)