IOC2 CHIP

Vic Alessi, 93/05/28

1.0 INTRODUCTION 2

2.0 GENERAL DESCRIPTION 3

- 2.1 85CX30 SERIAL DUART 3
- 2.2 PI1 PARALLEL INTERFACE 3
- 2.3 8042 KEYBOARD/MOUSE CONTROLLER 3
- 2.4 8254 PROGRAMMABLE TIMER 3
- 2.5 INT3 INTERRUPT MULTIPLEXOR 4
- 2.6 MISCELLANEOUS LOGIC 5
  - 2.6.1 POWER CONTROL 5
  - 2.6.2 VOLUME CONTROL 7
  - 2.6.3 ISDN GLUE 7
  - 2.6.4 OTHER CONTROL 7

3.0 PIN DESCRIPTION 8

4.0 REGISTER DESCRIPTION 13

- 4.1 SERIAL REGISTERS 14
- 4.2 PARALLEL REGISTERS 14
- 4.3 KEYBOARD/MOUSE REGISTERS 14
- 4.4 TIMER REGISTERS 14
- 4.5 INT3 REGISTERS 14
- 4.6 MISCELLANEOUS REGISTERS 16

5.0 AC TIMING 19

- 5.1 P Bus Timing 20
- 5.2 Power Control 21

6.0 GUINNESS/FULL HOUSE DIFFERENCES 22

A. VTI 85C30 SPECIFICATION
B. PI1 SPECIFICATION
C.VTI KEYBOARD CONTROLLER EXCERPT
D. VTI 8254 SPECIFICATION
E. IOC SCHEMATICS

1.0 INTRODUCTION

The I/O Controller (IOC) Chip is a single ASIC that contains 2 serial ports, a parallel port, a keyboard and mouse controller, programmable timer, interrupt multiplexor, and some miscellaneous logic. The miscellaneous logic includes control/status for a number of functions throughout the system, including power control, volume control, ISDN glue, and other control.

The IOC2 will be used in Guinness, and will hopefully be used in a cost reduced version of Full House. This cost reduction will require a board spin to replace the current discrete implementation with the IOC, but should be transparent to Software, except for a few minor differences. These Differences will be mentioned in their relevant sections.

The IOC2 will be turn-keyed by VLSI Technology Inc. VTI has existing macrocells for the Zilog Z85C30, Intel 8042 Keyboard/Mouse controller, and Intel 8254 Programmable Interval Timer. The rest of the circuitry will be provided by SGI, including the Parallel Interface (PI1), and an updated version of the INT2 interrupt multiplexor. VTI will also be required to add enhancements to the 85C30 to provide '85CX30' functionality. This added functionality is discussed in further detail in Section 2.1

The IOC2 chip contains 70 inputs, 40 outputs, 35 bidirectionals, 6 JTAG test pins, and 21 power and ground pins for a total of 172 pins. Power is estimated at 659 mW.

The chip can be broken into six sections:
(1) VTI 85CX30 Serial DUART,
(2) SGI PI1 Parallel Interface
(3) VTI 8042 Keyboard/Mouse Controller
(4) VTI 8254 Programmable Timer
(5) SGI INT3 Interrupt Multiplexor
(6) Miscellaneous Control

The six sections are described in more detail in the next section. This is followed by a section on pin descriptions and a section describing the register set. The last section covers AC timing parameters. As a final note, an attempt was made to not duplicate information that already existed in the various macrocell specifications. These specifications should be attached at the end of this document, and include the following macrocells: VTI 85C30, SGI PI1, VTI 8042, and VTI 8254. Also included in accompanying documentation should be the IOC2 schematics, dated 92/11/16.

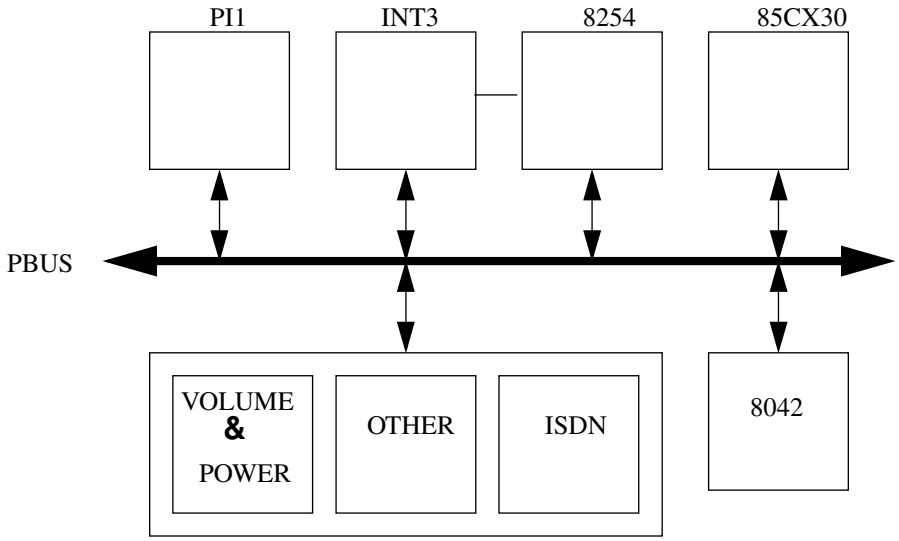

2.0 GENERAL DESCRIPTION

2.1 85CX30 SERIAL DUART

This macrocell provides the same functionality at the Zilog Z85C30 Enhanced Serial Communication Controller (ESCC), plus several enhancements. The ESCC is a dual-channel, full-duplex data communications controller capable of supporting several protocols. Each channel is capable of RS232 (ARC) or RS422 (Mac) transmission. Each channel is also capable of supporting MIDI. In addition, the 'X' version contains several enhancements found in the Z85C230. These include:

(1) 4-Byte Deep Transmit FIFO

(2) 8-Byte Deep Receive FIFO

(3) Write Register 7' (prime)

(4) Modified Databus Timing

(5) RR0 Status Latched During Read

Full House differs from Guinness in that it uses a full blown Zilog 85C230 with some additional features. These features include any of the 230 enhancements that relate to SDLC or Synchronous protocols. None of these features should be needed, so Guinness and Full House serial port drivers should be functionaly equivalent. It is believed that the 85C30 has enough SLDC capability to drive Apple Talk, since this is the orginal DUART used in the Mac.

See the VTI 85C30 excerpt at the end of this specification for more details.

2.2 PI1 PARALLEL INTERFACE

The parallel interface functionality is derived from the Parallel Interface (PI1) Chip, developed by Scott Sellers and John Lin of SGI. Is has four modes of operation: standard parallel port (SPP), SGI parallel port (SGIPP), HP BOISE high speed parallel port (HPBPP), and a Ricoh scanner mode. To support the different specifications, there are two basic modes of operation: register mode and DMA mode. In register mode, used primarily for SPP operations, all the control necessary to transfer data is performed by reads/writes to internal registers. For support of higher transfer rates, DMA mode is used. DMA mode provides automatic handshaking with the parallel device, reducing software overhead, and also contains an internal FIFO to reduce CPU intervention. The DMA channel can be tristated through the DMA_SEL Register, so that this channel may be shared with another device. More on this in Section 4.6. Functionality between Guinness and Full House are identical.

See the PI1 specification at the end of this document for more information.

2.3 8042 KEYBOARD/MOUSE CONTROLLER

This macro provides the same functionality as an Intel 80C42 controller loaded with a standard PC BIOS. The mouse and keyboard should be configured for PS/2 mode. Full House uses a discrete implementation of the Intel 8042 loaded with an Award BIOS. It is unknown at this time how the Award and VTI BIOS differ.

See the VTI excerpt at the end of this documentation for further details.

2.4 8254 PROGRAMMABLE TIMER

This macro provides the same functionality as an Intel 82C54 Programmable Interval Timer. This macro contains 3 programmable timers. A divide-by-20 state machine provides a 1MHz clock to Counter 2 for 1uS timer resolution. It is easy to derive any other source using the three counters. Counter 2 output clocks the other two counters. The terminal counts of Counter 0 and Counter 1 trigger interrupts to the INT3. This functionality is identical to that of the INT2 timer circuitry. The only difference between Full House (which uses INT2) and Guinness is that INT3 and the 8254 registers are located at different addresses.

See the VTI 82C5 Megacell Specification at the end of this document.

2.5 INT3 INTERRUPT MULTIPLEXOR

The Interrupt Multiplexor macrocell will be supplied by SGI and will be an updated version of the INT2 chip (hereafter referred to as INT3). INT3 is functionally identical to INT2, with the following exceptions:

- R3000 reset support has been removed.

- LED (general output) Register has been removed.

- FPU Interrupt support has been removed.

- Register set base address has changed.

- The 8254 system timer is now discussed as a separate entity in Section 2.4.

- There is now a ERROR STATUS register, which allows S/W to identify the source of a Bus Error.

- VME Interrupt inputs were replaced by mappable, polarity-selectable interrupt inputs.

- Vertical Status was removed. The same functionality can be obtained by using a mappable interrupt and setting the corresponding mask bit low.

- The special latching property of FIFO_FULL_N was removed. Future graphics systems (such as Newport) should latch this interrupt before sending it to the IOC. Existing graphics (such as Express) should solve this problem locally. This is also true for VERT_RETRACE_N, which needs some glue logic in current systems.

- Local1 bits 2 and 0, which were reserved in INT2, are now being used.

INT3 operation is pretty basic. Interrupts throughout the system are input to INT3 where they are multiplexed out onto 5 different priority level interrupt outputs. INT3 expects to see a latched, level-triggered interrupt. It does no internal latching, with the exception of the timer interrupts. The 5 interrupt output levels are as follows:

- Level 4, Bus Error

There are 3 bus error interrupts. These interrupts are not maskable. Their status can be read at IOC address 29\h.

- Level 3, Timer 1

There is a single TIMER1 interrupt that comes from the 8254 Timer. This interrupt is latched by INT3, and is cleared by writing a ‘1’ to bit 1 of the Timer Clear Reg, or by a system reset. See attached VTI specification for more information on the Timer.

- Level 2, Timer 0

There is also a single TIMER0 interrupt that comes from the 8254 Timer. This interrupt is latched by INT3, and is cleared by writing a ‘1’ to bit 0 of the Timer Clear Reg, or by a system reset. See Section 2.4 for more information on the Timer.

- Level 1, Local 1

There are 8 local1 interrupts, including MAP_INT1. Each interrupt is masked by its respective bit in the Local1 Mask Reg. The interrupts’ status can be read through the Local1 Status Reg. Status can always be read regardless of the state of the mask bit.

- Level 0, Local 0

There are 8 local0 interrupts, including MAP_INT0. Each interrupt is masked by its respective bit in the Local0 Mask Reg. The interrupts’ status can be read through the Local0 Status Reg. Status can always be read regardless of the state of the mask bit.

In addition, there are also 8 mappable polarity-selectable, interrupts. The polarities for each interrupt are set through their respective bit in the Map Pol Reg. These interrupts can be masked separately by two separate registers, Map Mask1 and Map Mask0, to produce MAP_INT1 and MAP_INT0, respectively. MAP_INT1becomes a Local1 interrupt, and MAP_INT0 is a Local0 interrupt. The status of the mappable interrupts can be read from the Map Status Reg. Note that a '1' is always an active interrupt, regardless of how its polarity is set

Full House uses INT2, so see the beginning of this section for Full House/Guinness differences (note that the biggest difference is that the location of the INT3/8254 registers has changed).

See Section 4.5 for more details on the INT3 registers.

2.6 MISCELLANEOUS LOGIC

The miscellaneous 'glue' logic that remains can be divided into four subsections: power control, volume control, ISDN glue, and other control. they are discussed in more detail below:

2.6.1 POWER CONTROL

The power control circuitry provides software with the ability of controlling the power supply, more frequently known as soft power up/down. In this arrangement, the machine will have a single on/off button that is not connected directly to the supply. Instead, when the button is pressed, it will signal the IOC to turn the supply on. Below is a detailed explanation of how the power control functions. Refer to the IOC schematics at the back of this specification for a better understanding.

There are 8 important power control signals:

+5V AUX comes from the power supply and is always active as long as the supply is plugged in.

+5VCC comes from the power supply and is only active when INHIBIT_N is not asserted.

DC_GOOD comes from the power supply and is asserted when +5VCC is above 4.7V. It should remain below 0.8V when it is not asserted.

PWR_CLR_N clears bit 0 (Power State Bit) of the Panel Register when low. It should be connected to an RC circuit with a long enough time constant to effectively clear the Power State Bit when +5V AUX is first active. It has been estimated that 4.7K x 47uF = 220 mS is sufficient. In addition, a 56K resistor should be connected in parallel to the Cap to ensure a rapid discharge when +5V AUX is removed.

INHIBIT_N is an input to the supply, and inhibits the +5VCC line of the supply when asserted.

PWR_INT_N interrupts S/W when power-down has been requested. This interrupt is combined with UP and DOWN interrupts to produce PANEL_INT_N.

SW_PWR_N is asserted when the on/off button is pressed. Pull up through a 4.7K resistor to +5V AUX.

RTC_TMR_N is asserted when the RTC watchdog timer is active. It is used to turn the machine back on after a power failure. Pull up through a 4.7K resistor to +5V AUX.

The system has 3 valid states, based on the power supply outputs:

OFF

In this state, the supply is unplugged or there has been an AC power-failure. All supply outputs are at high impedance. All soft power control signals are at high impedance.

AUX

In this state, the supply is plugged in, and the +5V AUX line is active. the main power, +5VCC is inhibited, so the system remains powered off.

MAIN

In this state, both +5V AUX and +5VCC are active, and the system is now powered up.

There are 4 valid events that can change the state of the power supply. The events are based on the following state machine:

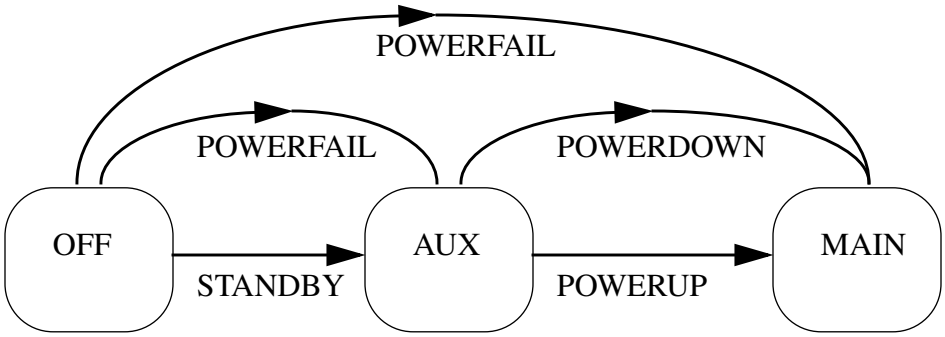

STANDBY occurs when the power supply cord is plugged in or power returns after an AC power-failure. First, this causes the +5V AUX circuitry to become active. The Power State Bit (bit 0 of the Panel Reg) should get cleared through PWR_CLR_N, ensuring that INHIBIT_N will be asserted and the system will remain off. After a given time, the Cap will charge up and the clear input of the Power State flop will de-assert. DC_GOOD will remain low since the +5V supply is still off at this point. PWR_INT_N goes to an unknown state. S/W does nothing during standby.

POWERUP occurs when INHIBIT_N is de-asserted and +5VCC becomes active, powering up the system. This is caused in one of two ways: the user can press the ON/OFF button, or the RTC_TMR_N output may be asserted. In either case, the Power State Bit is preset, and INHIBIT_N is deasserted. If ON/OFF is pressed, PWR_INT_N is also asserted. This interrupt should be masked at power up and cleared during initialization. 20nS after +5VCC reaches 4.7V, DC_GOOD will get asserted by the power supply. This signal masks out any floating signals until main power is at a normal level. Any PBUS signals should now be at a stable level. During this transaction, S/W must do the following: (1) Mask and clear PWR_INT_N during initialization. This bit is masked by clearing bit 1 of the INT3 Local1 Mask Register. The interrupt can be cleared by writing 0x03 to the Power Control Register. (2) Activate the RTC watchdog timer. This will assert RTC_TMR_N, which will restart the machine in the event of a power failure.

POWERDOWN occurs when several things happen. First, the ON/OFF button is pressed, which asserts PWR_INT_N. Software now has the opportunity to check to make sure it is safe to power down. If it is not, power down is aborted by clearing the interrupt and returning to normal operation. If it is all right to power down, S/W can gracefully shutdown the system, and as a last step, assert INHIBIT_N to the power supply. This causes +5VCC to turn off and DC_GOOD de-asserts. S/W steps for powerdown: (1) deactivate the RTC watchdog timer. This deasserts RTC_TMR_N. (2) Turn the machine off. This is done by writing 0x20 to the Power Control Register. As a last note, Power-down can also be achieved by a pull-down menu option.

POWERFAIL occurs whenever the power cord is unplugged or there is an AC power-failure. The power supply returns to the OFF state, and all signals go to high impedance, except RTC_TMR_N. This signal retains its state, because it is powered by the RTC battery. S/W needs to do nothing, since it set the watchdog timer when it first powered on.

Full House and Guinness have the same power control functionality.

2.6.2 VOLUME CONTROL

The volume control circuit takes as input an up and down volume button. It asserts an UP_INT_N if the ‘UP’ button is pressed, and DOWN_INT_N if the ‘DOWN’ button is pressed. These interrupts are combined with the PWR_INT_N power interrupt mentioned in the last section to produce PANEL_INT_N. This interrupt can be masked/read through INT3. The Panel Register provides the ability to read both the interrupt status and the button status (whether button is still depressed) via the Volume Register. This register should be monitored while either button is held, and the volume setting should get updated accordingly.

If both buttons are pressed simultaneously, a muting function occurs. The volume setting should get stored in non-volatile RAM during power down.

Full House does not have any support for Volume Control.

2.6.3 ISDN GLUE

The IOC2 contains glue for the DMA signals. This glue is necessary because of polarity differences and the fact that the Siemans ISDN chip only has a single DMA Acknowledge for both Trasmit/Receive DMA Requests. These DMA channels can be tristated internally, through the DMA_SEL Register. See section 4.6 for more details.

2.6.4 OTHER CONTROL

This group contains the left-over input and output control signals for Guinness and Full House. There is also eight general control lines that can be individually programmed as inputs or outputs for any unforseen, last minute control. See the register descriptions for GENERAL CONTROL, GC SELECT, READ, WRITE, RESET, DMA_SEL, and SYS ID in section 4 for a detailed overview.

3.0 PIN DESCRIPTION

Signal	Type	Drive	Pin	P_BUS INTERFACE PINS
ADDR<5:0>	Input		<5> 141 <4> 142 <3> 143 <2> 144 <1> 145 <0> 146	P-bus address lines.
DATA<7:0>	Bidir	8 mA	<7> 155 <6> 157 <5> 158 <4> 159 <3> 160 <2> 161 <1> 162 <0> 164	P-bus data lines.
RD_N	Input		152	P-bus read strobe, active low.
WR_N	Input		154	P-bus write strobe, active low.
IOC_CS_N	Input		150	IOC chip select.
DRQ_N	Output	2 mA	119	P-bus DMA request from parallel port, active low.
DACK_N	Input		139	HPC3 P-bus DMA acknowledge to parallel port, active low.
TC	Input		140	P-bus DMA terminal count.

Signal	Type	Drive	Pin	SERIAL PORT PINS
RXDx_N	Input		(1) 104 (2) 94	Receive Data. There is an input for each UART.
RTCx_N	Input		(1) 102 (2) 101	Receive/Transmit Clock input to 85C30. There is an input for each UART.
TRCx_N	Bidir		(1) 105 (2) 95	Transmit/Receive Clock input to 85C30. There is an input for each UART.
CTSx_N	Input		(1) 106 (2) 96	Clear to Send, active low. There is an input for each UART.
SYNCx_N	Bidir		(1) 103 (2) 93	SYNC input to 85C30. . There is an input for each UART.
DCDx_N	Input		(1) 112 (2) 100	Data Carrier Detect, active low. There is an input for each UART.
TXDx	Output	2 mA	(1) 108 (2) 97	Transmit Data. There is an output for each UART.
DTRx_N	Output	2 mA	(1) 110 (2) 98	Data Terminal Ready, active low. There is an output for each UART.
RTSx_N	Output	2 mA	(1) 111 (2) 99	Request to send, active low. There is an output for each UART.

Signal	Type	Drive	Pin	SERIAL PORT PINS
PC_MODEx_N	Output	2 mA	(1) 68 (2) 65	ARC Mode select, active low. There is an output for each UART.
MAC_MODEx_N	Output	2 mA	(1) 71 (2) 70	Mac Mode select, active low. RTSx_N must be low for this signal to be active. There is an output for each UART.

Signal	Type	Drive	Pin	PARALLEL PORT PINS
PD<7:0>	Bidir	12 mA	<7> 123 <6> 124 <5> 125 <4> 126 <3> 127 <2> 128 <1> 129 <0> 130	Parallel Port Address/Data Bus.
ACK_N	Input		134	Used as a data transfer acknowledge, active low.
BUSY	Bidir	12 mA	116	In SPP, SGIPP, and HPBPP write mode this pin is an output data strobe. In Ricoh this is output when pr/sc is low.
PE	Input		135	Signals paper end status. In HPBPP mode the peripheral uses this to acknowledge direction. If it is asserted it indicates forward, otherwise reverse is assumed.
SLCT	Input		114	Selects the on/off line status of the printer.
ERR_N	Bidir	12 mA	115	Active low. Monitors error/fault status of the printer, but in Ricoh mode this is an output pr/sc denoting DMA direction.
STB_N	Bidir	12 mA	120	Active low. In SPP, SGIPP, and HPBPP write mode this pin is an output data strobe. In Ricoh this is output when pr/sc is low.
AFD_N	Output	12 mA	121	Active low. Signals autofeed. In HPBPP read mode, this indicates host ready for data, and handshakes with ACK_N. In HPBPP write mode, this is driven high.
INIT_N	Output	12 mA	136	Active low. Reset output to the printer. In HPBPP mode, this indicates transfer direction (1=write, 0=read).
SLIN_N	Output	12 mA	137	Active low. In SPP mode this active low output denotes that data transfer direction is from printer to host. In SGIPP it is an input denoting a no ink status from the printer. This is always de-asserted in HPBPP.
ERR_DIR	Output	2 mA	117	Direction control error signal.
ADO_EN	Output	2 mA	118	Direction control for PD<7:0>.

Signal	Type	Drive	Pin	KEYBOARD/MOUSE PINS
KBD_DATA	Bidir	12 mA	3	Keyboard Data, open drain output.
KBD_CLK	Bidir	12 mA	2	Keyboard Clock, open drain output.
MSE_DATA	Bidir	12 mA	4	Mouse Data, open drain output.
MSE_CLK	Bidir	12 mA	6	Mouse Clock, open drain output.

Signal	Type	Drive	Pin	INTERRUPT CONTROLLER PINS
HPC_BUS_ERROR	Input		14	HPC3 bus error.
MC_BUS_ERROR	Input		13	MC bus error.
EISA_ERROR_N	Input		15	EISA error, active low.
VERT_RETRACE_N	Input		16	Vertical Retrace, active low.
VIDEO_VSYNC_N	Input		17	Video Vsync, active low.
AC_FAIL_N	Input		18	AC Fail, active low.
HPC_DMA_DONE	Input		19	HPC DMA done.
LOCAL1_N<2>	Input		30	General purpose interrupt, reserved in INT2.
LOCAL1_N<0>	Input		31	General purpose interrupt, reserved in INT2.
GRX_INT_N	Input		27	Graphics interrupt, active low.
MC_DMA_DONE	Input		20	MC DMA done.
ENET_INT	Input		22	Ethernet interrupt.
SCSI1_INT	Input		24	SCSI channel 1 interrupt.
SCSI0_INT	Input		25	SCSI channel 0 interrupt.
FIFO_FULL_N	Input		26	FIFO full interrupt, active low.
MAP_INT_N<7:6,3:0>	Input		<7> 28 <6> 29 <3> 32 <2> 33 <1> 34 <0> 35	Mappable interrupts for general use. Polarity selectable, default is active low.
CPU_INT_N<4:0>	Output	4 mA	<4> 8 <3> 9 <2> 10 <1> 11 <0> 12	CPU interrupt outputs.

Signal	Type	Drive	Pin	POWER/VOLUME CONTROL PINS
SW_PWR_N	Input		165	On/Off Power Button, active low.
SW_UP_N	Input		37	Up Button input, active low.
SW_DOWN_N	Input		38	Down Button input, active low.
RTC_TMR_N	Input		166	RTC Watchdog Timer, active low. Used to turn the machine back on after a power failure. Active low.
DC_GOOD	Input		167	Power supply signal indicating that the system has power.
+5V AUX	Input		170	Auxiliary +5V from the power supply, continuously on as long as supply is plugged in.
PWR_CLR_N	Input		168	When AUX supply goes away, the Power State Register is cleared through an external RC circuit connected to this line. Active low.

Signal	Type	Drive	Pin	POWER/VOLUME CONTROL PINS
INHIBIT_N	Output	12 mA	169	Controls the state of the power supply. A low inhibits the supply, high turns the supply on.

Signal	Type	Drive	Pin	ISDN GLUE PINS
ISDN_DACKTx_N	Input		(A) 39 (B) 47	Transmit DMA acknowledge from HPC3, active low. There is an input for each ISDN B channel.
ISDN_DACKRx_N	Input		(A) 40 (B) 48	Receive DMA acknowledge from HPC3, active low. There is an input for each ISDN B channel.
ISDN_DRQTx	Input		(A) 42 (B) 50	Transmit DMA request from Siemans HSCX. There is an input for each ISDN B channel.
ISDN_DRQRx	Input		(A) 45 (B) 52	Receive DMA request from Siemans HSCX. There is an input for each ISDN B channel.
ISDN_DACKx_N	Output	4 mA	(A) 41 (B) 49	Transmit/Receive DMA acknowledge to Siemans HSCX, active low. There is an input for each ISDN B channel.
ISDN_DRQTx_N	Output	4 mA	(A) 43 (B) 51	Transmit DMA request to HPC3, active low. There is an input for each ISDN B channel.
ISDN_DRQRx_N	Output	4 mA	(A) 46 (B) 53	Receive DMA request to HPC3, active low. There is an input for each ISDN B channel.
ISDN_RST	Output	4 mA	56	ISDN reset, settable through the Reset Register.

Signal	Type	Drive	Pin	MISCELLANEOUS PINS
SYS_ID<4:0>	Input		<4> 72 <3> 73 <2> 74 <1> 75 <0> 76	System ID bits, used to read board revision and system type.
ENET_LI_N	Input		77	Ethernet link indicator, active low. Indicates a TP link.
ENET_PSTAT	Input		78	Ethernet power status. A high indicates normal +12V power.
SCSI1_PSTAT	Input		79	SCSI1 power status. A high indicates normal +5V power.
SCSI0_PSTAT	Input		80	SCSI0 power status. A high indicates normal +5V power.
LED<2:1>	Output	12 mA	<2> 54 <1> 55	Sets the LED color. Low is orange, high is green.
EISA_RST_N	Output	4 mA	57	Resets EISA for Full House, active low.
DC_MARGIN_HI	Output	12 mA	58	Set high to step voltage from +5V to +5.5V.
DC_MARGIN_LO	Output	12 mA	59	Set high to step voltage from +5V down to +4.5V.
ENET_AUTOSEL	Output	2 mA	60	Ethernet auto select. Set low for manual, high for auto-select via TP LI.
ENET_PORTSEL	Output	2 mA	62	Ethernet port select. Set low for TP, high for AUI.
ENET_UTP	Output	2 mA	63	Ethernet UTP select. Set high for 100 ohm unshielded TP, low for 150 ohm shielded TP.

Signal	Type	Drive	Pin	MISCELLANEOUS PINS
ENET_NTH	Output	2 mA	64	Ethernet NTH select. Set high for normal TP squelch threshold, set low to reduce by 4.5dB.
CLK_20MHz	Input		148	20 MHz system clock.
CLK_SER	Input		91	85CX30 Clock Input, selected through an internal mux. This clock should only be used if 85C30 data loss problem exists.
RST_N	Input		81	Chip reset, active low.
GEN_CNTL<7:0>	Bidir	4mA	<7> 82 <6> 83 <5> 84 <4> 83 <3> 86 <2> 87 <1> 89 <0> 90	General Control lines, programmable as either inputs or outputs.

Signal	Type	Drive		TEST PINS
ENTEI	Input		138	
JTRST_N	Input		173	JTAG Reset
JTDI	Input		1	JTAG Data In
JTMS	Input		171	JTAG Master Select
JTCK	Input		172	JTAG Clock
JTDO	Output	4 mA	174	JTAG Data Out

4.0 REGISTER DESCRIPTION

0x1FBD9800	Parallel Port Data Register	0x1FBD9880	INT3 Local0 Status Register
0x1FBD9804	Parallel Port Control Register	0x1FBD9884	INT3 Local0 Mask Register
0x1FBD9808	Parallel Port Status Register	0x1FBD9888	INT3 Local1 Status Register
0x1FBD980C	Parallel Port DMA Control Register	0x1FBD988C	INT3 Local1 Mask Register
0x1FBD9810	Parallel Port Interrupt Status Register	0x1FBD9890	INT3 Map Status Register
0x1FBD9814	Parallel Port Interrupt Mask Register	0x1FBD9894	INT3 Map Mask0 Register
0x1FBD9818	Parallel Port Timer 1 Register	0x1FBD9898	INT3 Map Mask1 Register
0x1FBD981C	Parallel Port Timer 2 Register	0x1FBD989C	INT3 Map Pol Register
0x1FBD9820	Parallel Port Timer 3 Register	0x1FBD98A0	INT3 Timer Clear Register
0x1FBD9824	Parallel Port Timer 4 Register	0x1FBD98A4	INT3 Error Status Register
0x1FBD9828	Not Used	0x1FBD98A8	Not Used
0x1FBD982C	Not Used	0x1FBD98AC	Not Used
0x1FBD9830	Serial Port1 Command Transfer	0x1FBD98B0	Timer Counter 0 Register
0x1FBD9834	Serial Port1 Data Transfer	0x1FBD98B4	Timer Counter 1 Register
0x1FBD9838	Serial Port2 Command Transfer	0x1FBD98B8	Timer Counter 2 Register
0x1FBD983C	Serial Port2 Data Transfer	0x1FBD98BC	Timer Control Word Register
0x1FBD9840	Keyboard/Mouse Registers	0x1FBD98C0	Reserved
0x1FBD9844	Keyboard/Mouse Registers	0x1FBD98C4	“
0x1FBD9848	GC Select Register	0x1FBD98C8	“
0x1FBD984C	General Control Register	0x1FBD98CC	“
0x1FBD9850	Panel Register	0x1FBD98D0	“
0x1FBD9854	Not Used	0x1FBD98D4	“
0x1FBD9858	System ID Register	0x1FBD98D8	“
0x1FBD985C	Not Used	0x1FBD98DC	“
0x1FBD9860	Read Register	0x1FBD98E0	“
0x1FBD9864	Not Used	0x1FBD98E4	“
0x1FBD9868	DMA Select Register	0x1FBD98E8	“
0x1FBD986C	Not Used	0x1FBD98EC	“
0x1FBD9870	Reset Register	0x1FBD98F0	“
0x1FBD9874	Not Used	0x1FBD98F4	“
0x1FBD9878	Write Register	0x1FBD98F8	“
0x1FBD987C	Not Used	0x1FBD98FC	“

The IOC2 registers are selected through IOC_CS_N. There are 64 internal registers, which start at the base address of 0x1fbd9800 (PBUS_CS_N<6> only. If a different chip select is used, refer to the HPC3 Specification for the appropriate starting address). The following is a more detailed description of each register.

4.1 SERIAL REGISTERS, addresses 0x1FBD9830-0x1FBD983C

The 85CX30 DUART uses an indirect method of addressing, and requires two operations to read or write a register. The first operation sets the index of the desired register. The second operation actually reads/writes the desired register. In addition, the desired channel and transfer type must be selected through two address lines. Address bit 1 selects the channel in which the read or write operation occurs. A high selects channel 2 and a low selects channel 1. Address bit 0 defines the type of information transferred. A high means data is being transferred and a low indicates a command. See the VTI 85C30 Specification for further information on the register set.

4.2 PARALLEL REGISTERS, addresses 0x1FBD9800-0x1FBD982C

The Parallel Port Macro is identical to the Parallel Interface Chip designed internally by Scott Sellers and John Lin of Silicon Graphics. Section 3 of their specification defines the register set in detail.

4.3 KEYBOARD/MOUSE REGISTERS, addresses 0x1FBD9840-0x1FBD9844

The Keyboard and Mouse Controller is identical to a hard-coded Intel 82C42. The operation of this part, including the individual register descriptions, can be found in the VTI Keyboard Controller excerpt at the end of this specification.

4.4 TIMER REGISTERS, addresses 0x1FBD98B0-0x1FBD98BC

The Timer Macro is a standard Intel 8254 Programmable Interval Timer. The VTI 8254 specification is included at the end, and contains information on the timer registers.

4.5 INT3 REGISTERS, addresses 0x1FBD9880-0x1FBD98AC

Bit	Oper	LOCAL0 STATUS REGISTER, address 0x1FBD9880
7	R	Mappable Interrupt 0 Status. (masked by MAP MASK0). A high indicates an active interrupt (not affected by LOCAL0 MASK setting).
6	R	Graphics Interrupt Status. A high indicates an active interrupt (not affected by LOCAL0 MASK setting).
5	R	Parallel Port Interrupt Status. A high indicates an active interrupt (not affected by LOCAL0 MASK setting).
4	R	MC DMA Done Status. A high indicates an active interrupt (not affected by LOCAL0 MASK setting).
3	R	Ethernet Interrupt Status. A high indicates an active interrupt (not affected by LOCAL0 MASK setting).
2	R	SCSI Channel 1 Interrupt Status. A high indicates an active interrupt (not affected by LOCAL0 MASK setting).
1	R	SCSI Channel 0 Interrupt Status. A high indicates an active interrupt (not affected by LOCAL0 MASK setting).
0	R	FIFO Full Interrupt Status. A high indicates an active interrupt (not affected by LOCAL0 MASK setting).

Bit	Oper	LOCAL0 MASK REGISTER, address 0x1FBD9884
7:0	RW	Mappable Interrupt 0 Mask. A low masks the interrupt, which is the default after reset.
6	RW	Graphics Interrupt Mask. A low masks the interrupt, which is the default after reset.
5	RW	Parallel Port Interrupt Mask.A low masks the interrupt, which is the default after reset.
4	RW	MC DMA Done Mask. A low masks the interrupt, which is the default after reset.
3	RW	Ethernet Interrupt Mask. A low masks the interrupt, which is the default after reset.

Bit	Oper	LOCAL0 MASK REGISTER, address 0x1FBD9884
2	RW	SCSI Channel 1 Interrupt Mask. A low masks the interrupt, which is the default after reset.
1	RW	SCSI Channel 0 Interrupt Mask. A low masks the interrupt, which is the default after reset.
0	RW	FIFO Full Interrupt Mask. A low masks the interrupt, which is the default after reset.

Bit	Oper	LOCAL1 STATUS REGISTER, address 0x1FBD9888
7	R	Vertical Retrace Status. A high indicates an active interrupt (not affected by LOCAL1 MASK setting).
6	R	Video Vsync Interrupt Status. A high indicates an active interrupt (not affected by LOCAL1 MASK setting).
5	R	AC Fail Interrupt Status. A high indicates an active interrupt (not affected by LOCAL1 MASK setting).
4	R	HPC DMA Done Status. A high indicates an active interrupt (not affected by LOCAL1 MASK setting).
3	R	Mappable Interrupt 1 Status (masked by MAP MASK1). A high indicates an active interrupt (not affected by LOCAL1 MASK setting).
2	R	General Purpose LOCAL1_N<2> Interrupt, active low. This interrupt was unused in INT2.
1	R	Panel Interrupt Status. This interrupt asserts when either PWR_INT_N, UP_INT_N, or DOWN_INT_N activates. A high indicates an active interrupt (not affected by LOCAL1 MASK setting).
0	R	General Purpose LOCAL1_N<0> Interrupt, active low. This interrupt was unused in INT2.

Bit	Oper	LOCAL1 MASK REGISTER, address 0x1FBD988C
7	RW	Vertical Retrace Mask. A low masks the interrupt, which is the default after reset.
6	RW	Video Vsync Interrupt Mask. A low masks the interrupt, which is the default after reset.
5	RW	AC Fail Interrupt Mask. A low masks the interrupt, which is the default after reset.
4	RW	HPC DMA Done Mask. A low masks the interrupt, which is the default after reset.
3	RW	Mappable Interrupt 1 Mask. A low masks the interrupt, which is the default after reset.
2	RW	General Purpose LOCAL1_N<2> Interrupt Mask. A low masks the interrupt, which is the default after reset.
1	RW	Panel Interrupt Mask. A low masks the interrupt, which is the default after reset.
0	RW	General Purpose LOCAL1_N<0> Interrupt Mask. A low masks the interrupt, which is the default after reset.

Bit	Oper	MAP STATUS REGISTER, address 0x1FBD9890
7:6	R	Mappable Interrupt<7:6> Status. A high bit indicates that the respective interrupt is active. The status not affected by either of the MAP MASK registers, or the polarity setting in the MAP POL register.
5	R	Serial DUART Interrupt Status. A high indicates an active interrupt (not affected by LOCAL1 MASK setting).
4	R	Keyboard/Mouse Interrupt Status. A high indicates an active interrupt (not affected by LOCAL1 MASK
3:0	R	Mappable Interrupt<3:0> Status. A high bit indicates that the respective interrupt is active. The status not affected by either of the MAP MASK registers, or the polarity setting in the MAP POL register.

Bit	Oper	MAP MASK0 REGISTER, address 0x1FBD9894
7:0	RW	Mappable Interrupt<7:0> Mask 0. This mask arbitrates which mappable interrupts cause Mappable Interrupt 0 to activate. A low bit masks the respective interrupt, which is the default after reset. Note that bit <5> is reserved for the Serial DUART, and bit <4> is reserved for the Keyboard/Mouse Controller.

Bit	Oper	MAP MASK1 REGISTER, address 0x1FBD9898
7:0	RW	Mappable Interrupt<7:0> Mask 1. This mask arbitrates which mappable interrupts cause Mappable Interrupt1 to activate. A low bit masks the respective interrupt, which is the default after reset.Note that bit <5> is reserved for the Serial DUART, and bit <4> is reserved for the Keyboard/Mouse Controller.

Bit	Oper	MAP POL REGISTER, address 0x1FBD989C
7:0	RW	Mappable Polarity Select<7:0>. A high bit selects ‘active high’ polarity on the respective Mappable Interrupt<7:0> input, a low bit select ‘active low’ polarity, which is the default.Note that bit <5> is reserved for the Serial DUART, and bit <4> is reserved for the Keyboard/Mouse Controller. Since these are both active low interrupts, their polarity bits should always be set low.

Bit	Oper	TIMER CLEAR REGISTER, address 0x1FBD98A0
7:2		Not Used
1	W	Timer1 Clear. Writing a ‘1’ to this location resets the Timer1 Interrupt.
0	W	Timer0 Clear. Writing a ‘1’ to this location resets the Timer0 Interrupt.

Bit	Oper	ERROR STAT REGISTER, address 0x1FBD98A4
7:3		Not Used
2	R	HPC Bus Error Status. A high indicates an active interrupt.
1	R	MC Bus Error Status. A high indicates an active interrupt.
0	R	EISA Error Status. A high indicates an active interrupt.

4.6 MISCELLANEOUS REGISTERS, addresses 0x1FBD9848-0x1FBD987C

Bit	Oper	GENERAL CONTROL SELECT REGISTER, address 0x1FBD9848
7:0	RW	Configures GEN_CNTL<7:0> as either input, if respective bit is low, or an output, if the bit is high.

Bit	Oper	GENERAL CONTROL REGISTER, address 0x1FBD984C
7:0	RW	Control Bits<7:0>, can be configured as either an input or output by setting the respective bit of the GC Select Reg.

Bit	Oper	FRONT PANEL REGISTER, address 0x1FBD9850
7	R	Volume Up Hold Status. This bit is low when the ‘UP’ button is being depressed.

Bit	Oper	FRONT PANEL REGISTER, address 0x1FBD9850
6	RW	Volume Up Interrupt Status. This interrupt gets latched when the ‘UP’ button has been pressed, and is active low. Write a ‘1’ to this bit to clear the interrupt.
5	R	Volume Down Hold Status. This bit is low when the ‘DOWN’ button is being depressed.
4	RW	Volume Down Interrupt Status. This interrupt gets latched when the ‘DOWN’ button has been pressed, and is active low. Write a ‘1’ to this bit to clear the interrupt.
3:2		Not Used
1	R/W	Power Interrupt Status. The interrupt is asserted and latched when the power button is pressed The Interrupt is active low. Write a ‘1’ to this bit to clear the interrupt.
0	R/W	Power State (active low). When low, the supply is off. When high, the supply is on.

Bit	Oper	SYSTEM ID REGISTER, address 0x1FBD9858
7:5	R	Chip Revision. 00\h means a discrete implementation of the IOC.
4:1	R	Board Revision.
0	R	System Type.’0’ is Sapphire,’1’ is Full House.

Bit	Oper	READ REGISTER, address 0x1FBD9860
7	R	Ethernet Link Indicator (active low). A low bit indicates a TP link, a high indicates no link, default to AUI.
6	R	Ethernet Power Status. A low indicates no power (open PTC), high indicates +12V power.
5	R	SCSI1 Power Status. A low indicates no power (open PTC), high indicates +5V power. (Full House only)
4	R	SCSI0 Power Status. A low indicates no power (open PTC), high indicates +5V power.
3:0	R	Not Used.,

Bit	Oper	DMA_SEL Register, address 0x1FBD9868
7:6		Not Used.
5:4	RW	Serial Port Clock Select. 00\h selects a 10MHz internal clock (default), 01\h selects a 6.67MHz internal clock, and 02\h or 03\h selects the external clock input.
3		Not Used.
2	RW	Parallel Port DMA Select. A high bit selects the Parallel Port DMA channel. 0\h is the default after reset.
1	RW	ISDN Channel B DMA Select. A high bit selects the Parallel Port DMA channel. 0\h is the default after reset
0	RW	ISDN Channel B DMA Select. A high bit selects the Parallel Port DMA channel. 0\h is the default after reset

Bit	Oper	RESET REGISTER, address 0x1FBD9870
7:6		Not Used.
5:4	RW	LED bits, cleared after reset.
3		ISDN Reset. Set low to reset ISDN, high for normal operation. Cleared after reset. (Guinness only)

Bit	Oper	RESET REGISTER, address 0x1FBD9870
2	RW	EISA Reset. Set low to reset EISA, high for normal operation. Cleared after reset. (Full House only).
1	RW	Keyboard/Mouse Reset. Set low to reset Keyboard/Mouse Controller, high for normal operation. Cleared after reset.
0	RW	Parallel Port Reset. Set low to reset the Parallel Port, high for normal operation. Cleared after reset.

Bit	Oper	WRITE REGISTER, address 0x1FBD9878
7	RW	Margin High. Set low for normal +5V operation, high to step supply up to +5.5V. Cleared at reset.
6	RW	Margin Low. Set low for normal +5V operation, high to step supply down to +4.5V. Cleared at reset.
5	RW	UART1 PC Mode. Set low to configure Port1 for RS422 Mac mode, high to select RS232 PC mode. Cleared at reset.
4	RW	UART2 PC Mode. Set low to configure Port 2 for RS422 Mac mode, high to select RS232 PC mode. Cleared at reset.
3	RW	Ethernet Auto Select (active high). Set low for manual mode, high to have LXT901 automatically select TP or AUI based on link integrity. Cleared at reset.
2	RW	Ethernet Port Select. Set low for TP, high for AUI. This setting is only used when Auto Select is in manual mode. Cleared at reset.
1	RW	Ethernet UTP/STP select. Set low to select 150 ohm termination for shielded TP (default), set high to select 100 ohm termination for unshielded TP. Cleared at reset.
0	RW	Ethernet Normal Threshold (NTH) select. Set low to select the normal TP squelch threshold (default), high to reduce the threshold by 4.5 dB (set low when reset).

5.0 AC TIMING

5.1 P Bus Timing

The Pbus timing was based around the V85CX30, since it had the most stringent requirements. By meeting the 85CX30 timing requirements, the timing requirements are met for all other macros.

TsA(wr) > 35ns, currently 56ns

ThA(wr) > 0ns

TsA(rd) > 50ns, currently 56ns

ThA(rd) > 0ns

Tl(rd) > 125ns, currently 180ns

Tl(wr) > 180ns, currently 180ns

TsD(wr) > 22ns, currently 32ns

ThD(wr) > 0ns

Based on the above data and the diagram on the following page, P2 should be 2 cycles, or 60ns. P3 should be 180ns or 6 cycles. P4 should be 30ns, or 1 cycle. P1, which is the time between chip selects, should be greater than 500ns. All of these times are based on a 33MHz GIO bus speed.

Below are some important delays internal to IOC2:

Thd from P_DATA after RD_N : 4.5ns

Tpd from RD_N to P_DATA : 53.5ns

Tpd from RD_N to internal read stobes : 5.88ns

Tpd from IOC_CS_N to internal chip selects : 10.5ns

Tpd from P_ADDR to internal address lines : 5.8ns

Tpd from IOC_CS to 85CX30 chip select : min 22ns, max 95ns

Tsu from P_DATA to WR_N : min 21ns, max 98ns

(note: the above delays are needed to meet the 85CX30 timing requirements.

See the VTI C8530 and the Zilog Z85230 specifications for more detail.)

5.2 Power Control

The power control functionality was described in section 2.6.1. The accompanying timing diagram follows.

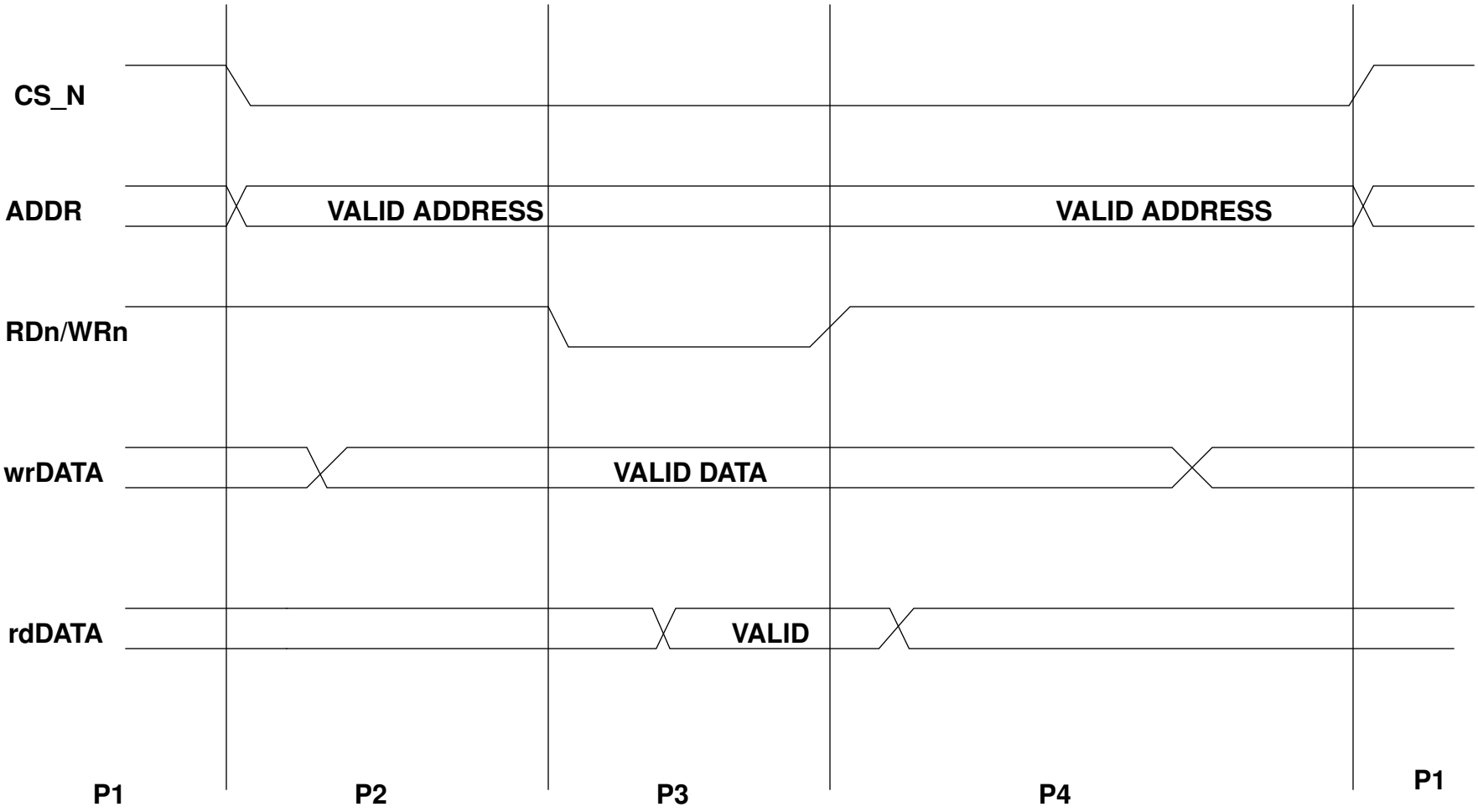
CS_N
ADDR
VALID ADDRESS
VALID ADDRESS
RDn/WRn
wrDATA
VALID DATA
rdDATA
VALID
P1
P2
P3
P4
P1

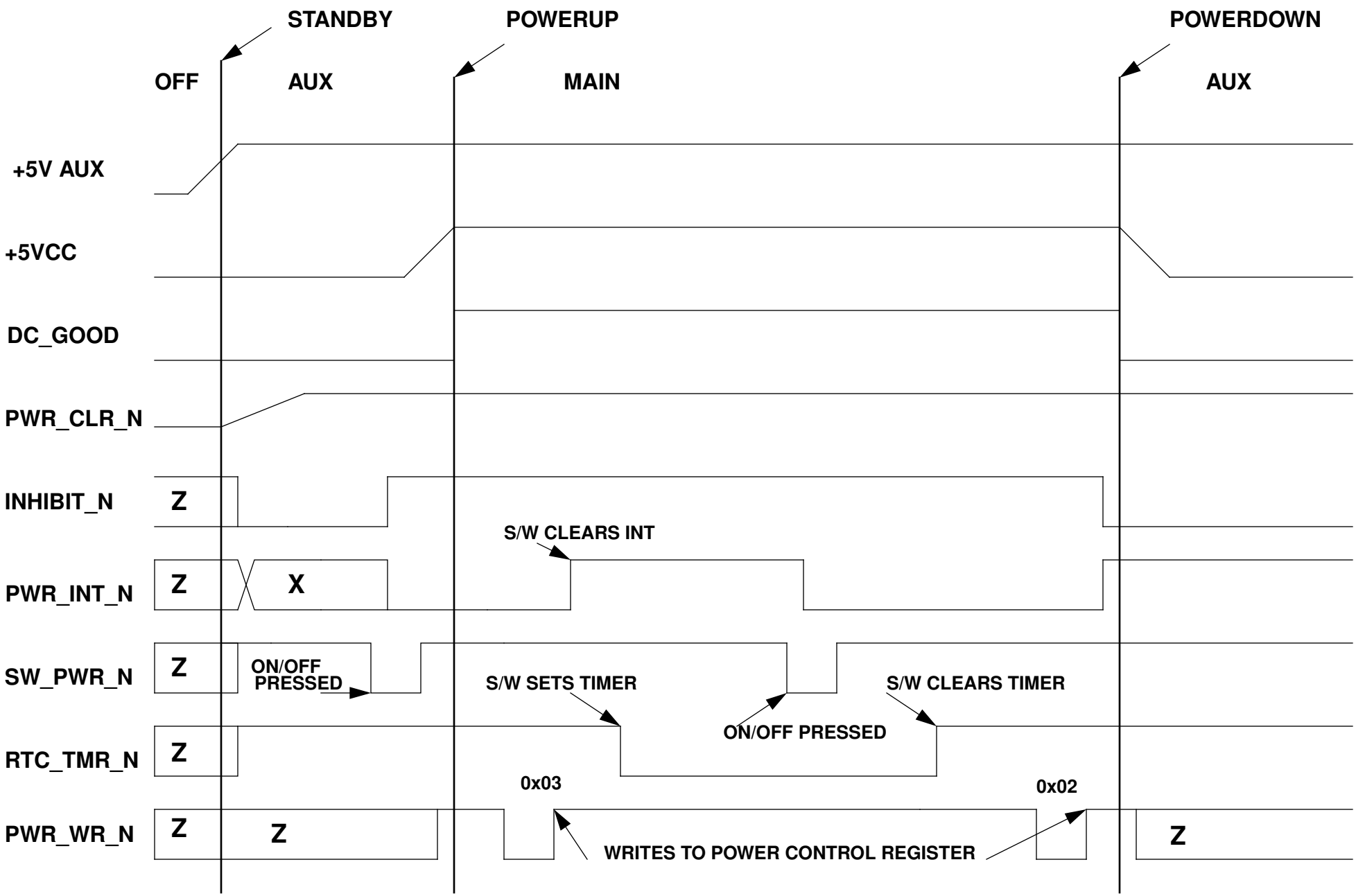
STANDBY
POWERUP
POWERDOWN
OFF
AUX
MAIN
AUX
+5V AUX
+5VCC
DC_GOOD
PWR_CLR_N
INHIBIT_N
Z
S/W CLEARS INT
PWR_INT_N
Z
X
SW_PWR_N
Z
ON/OFF PRESSED
S/W SETS TIMER
S/W CLEARS TIMER
ON/OFF PRESSED
RTC_TMR_N
Z
0x03
0x02
PWR_WR_N
Z
Z
WRITES TO POWER CONTROL REGISTER
Z